5

2013 NOV 25 PM 3 35
OFFICE OF THE CITY CLERK
CAMBRIDGE, MASSACHUSETTS

APPLICATION FOR APPROVAL OF CURB CUTS AND DRIVEWAYS AND DISCONTINUANCE OF EXISTING CURB CUTS

FOR
38 ALBANY STREET AND
50 ALBANY STREET
CAMBRIDGE

Submitted by the Massachusetts Institute of Technology
November 18, 2013

Contents:

1. Introduction
2. Application Form
3. Abutters Form and Certified Abutters List
4. Site Plans

1. Introduction

This introduction briefly summarizes the enclosed application for approval of a curb cut and driveway at 38 Albany Street and 50 Albany Street (along with discontinuance of one existing curb cut off Albany Street). The Application Form and supporting materials appear immediately following this application.

1. Brief Summary of the Parcel and Proposed Curb Cuts

The curb cuts and driveways addressed in this Application are located along the southern side of Albany Street at the northern boundary of the parcel identified on the Cambridge City Assessor's Map as Block/Map 53, Parcel 12 and Block/Map 53, Parcel 64 and is currently known as 38 Albany Street and 50 Albany Street, respectively (the "Site").

The Site is owned by the Massachusetts Institute of Technology (the "Applicant") and is located near the intersection of Albany Street and Portland Street (the "Intersection"). The Applicant proposes changes to the Site's curb cut alignments to coordinate with traffic improvements to the Intersection that are being undertaken by an affiliate of the Applicant in connection with the development of an adjacent parcel, pursuant to Section 1(a) of the Special Permit from the Planning Board dated March 16, 2009 (the "Special Permit").

Three (3) curb cuts off of Albany Street are currently located along the Site's northern boundary. With this application, the Applicant proposes to discontinue the existing curb cut located at the Intersection, near the center of the Site's northern boundary (the "Center Curb Cut") and add a new curb cut and driveway (the "New East Driveway") adjacent to the existing curb cut and driveway near the eastern boundary of the Site (the "Existing East Driveway"). The existing curb cut and driveway located to the west of the Intersection (the "West Driveway") will remain unchanged.

2. Description of Proposed Curb Cut Extension and Discontinuance off Albany Street

As shown on the plans attached to this application, the Existing East Driveway is located approximately 65 feet east of the Intersection and currently consists of a curb cut and a single-aisle driveway approximately 17.50 feet in width. The Existing East Driveway extends in a southerly direction from the curb cut, across the sidewalk on Albany Street, into the parking lot located at the Site. As shown on the attached plans, the Applicant proposes to add the New East Driveway next to the Existing East Driveway so that there will be two driveways – one for entry and one for exit – each approximately 11.0 feet in width. The curb cut for the Existing East Driveway will be reduced to approximately 11.0 feet in width. The curb cut for the New East Driveway will be approximately 13.9 feet in width. In addition, the Applicant proposes to discontinue the Center Curb Cut located at the Intersection. As a result, all vehicles traveling into and out of the Site will be diverted away from the Intersection. These changes to the

existing curb cut configuration at the Site will increase traffic safety and improve the flow of vehicles traveling through the Intersection, including those entering and exiting the Site.

3. Summary of Remaining Application Materials

The Application Form immediately follows this introduction. Certain responses provided on the Application Form are more fully described as follows:

- In lieu of sketches, we have provided the attached site plans with detailed information and measurements for the New East Driveway and the Existing East Driveway.

- We believe the area and cost estimates included on the Application Form are not applicable because the Applicant will construct the New East Driveway and modifications to the Existing East Driveway, as well as close the Center Curb Cut at its sole cost and expense.

Certain other responses in the Application Form reference information contained in this introduction.

The next section of the application includes a Certified Abutters List and Abutters Form. We requested a Certified Abutters List for the entire Site and there are no unrelated abutters; all owners listed on the Certified Abutters List are either the Applicant or affiliates of the Applicant.

Following the Certified Abutters List and Abutters Form is a site plan showing the Site. For informational purposes, this site plan shows the current configuration of the Site, including the three (3) curb cuts off Albany Street along the northern side of the Site (the West Driveway that will remain unchanged, the Center Curb Cut that will be discontinued, and the Existing East Driveway that will be modified). The next sheets showing the proposed curb cut configuration and contain details and dimensions for the New East Driveway and the Existing East Driveway.

2. Application Form

Please see attached

APPLICATION FOR DRIVEWAY CUTS AND OPENINGS

CITY OF CAMBRIDGE

INSTRUCTIONS:
In order to obtain permission for a driveway cut or opening you must first get approval from the Department of Inspectional Services on the zoning requirements for off-street parking, including the cooperation of your immediate abuttors.

To receive a review from Inspectional Services you must fill out Part I of the application. Be sure to draw your plot plan on Drawing 1, choosing the lot that represents your lot,s position, i.e. corner or interior. You must also include a sketch of the proposed driveway. including dimensions, on Drawing 2. You may then calculate the cost of the driveway by using the formula based on your chose of surfaces. You must also include signed forms from abutters on the sides and rear of the property and from all property owners located across the street(s) from the property.

Once you have gathered this information on the application, it should be submitted to:

Zoning Officer
Inspectional Services
831 Massachusetts Avenue
Cambridge, MA 02139

If the application is approved by Inspectional Services, it will then be sent on to Traffic and Parking, the Historical Commission and the Department of Public Works. If approved by Public Works, the application and backup will be sent to the City Council for their approval. Once the City Council approves, the driveway curb cut can be installed. However, the full cost of the cut must be paid to Public Works before the work will start.

If, however, Inspectional Services denies your application you may then appeal to the Zoning Board of Appeals.

DATE: / /

PART I:

Address of proposed curb cut or off-street parking facility: 38 Albany Street and 50 Albany Street

Frontage: Albany Street, approximately 245 feet Block and Lot: Block/Map 53, Parcel 12 and Block/Map 53, Parcel 64

Setback (distance from building to sidewalk): N/A - there are no buildings on the lot

Distance from proposed driveway to surrounding structures and property line: See attached plans

Dimensions of proposed driveway: See attached plans

Location of any trees, sign posts, fire hydrants, utility poles, etc., in direct vicinity of proposed driveway: See attached plans

☐ Plot plan is included

☐ Sketch of driveway with cost estimate is included

☐ All abuttor's forms are included

DRAWING 1: **SEE ATTACHED PLANS**

PLEASE INDICATE LOCATION OF HOUSE AND DRIVEWAY.
BE SURE TO GIVE DIMENSIONS OF LOT.

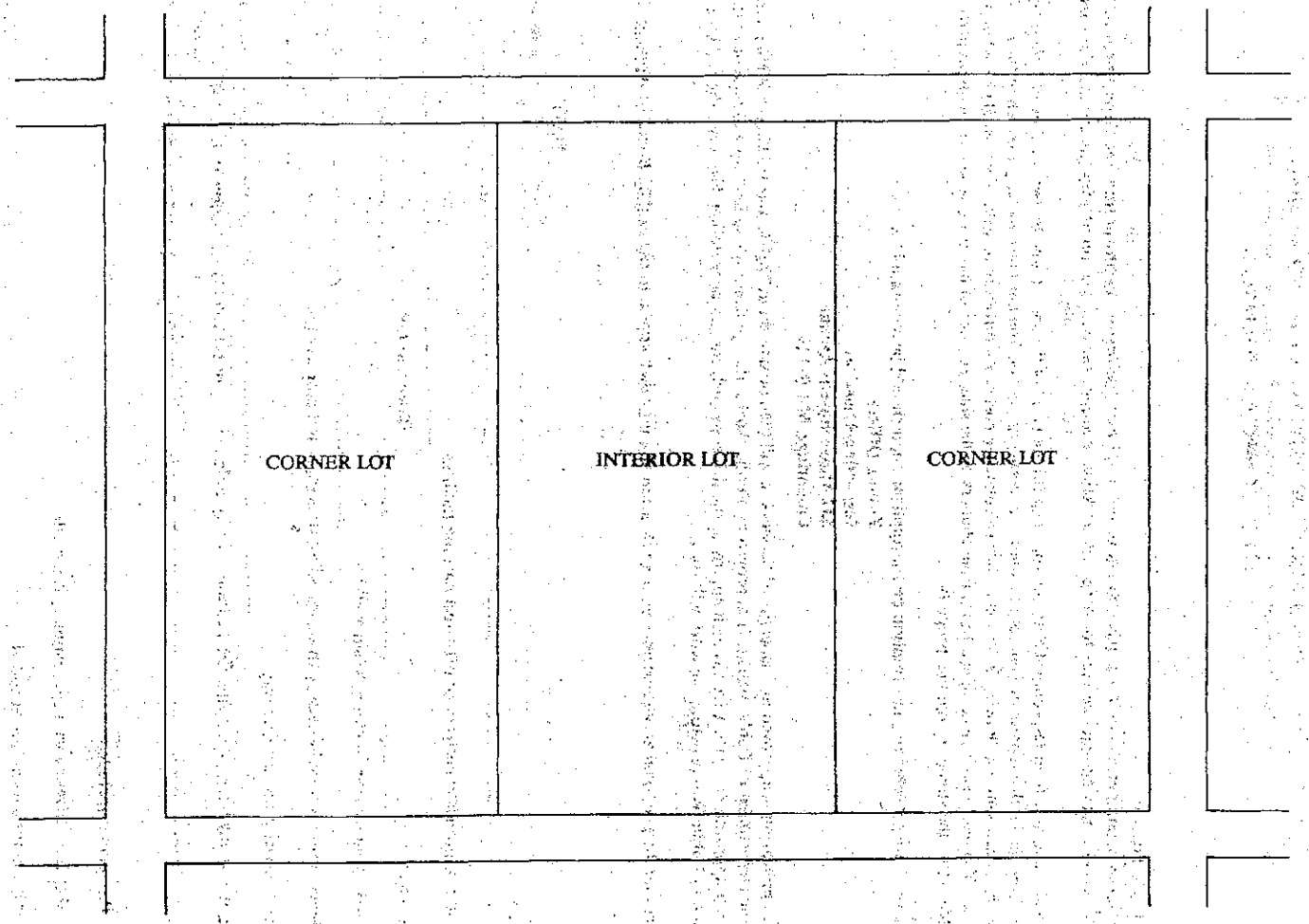

DRAWING 2:

SKETCH OF PROPOSED DRIVEWAY WITH COST ESTIMATE

CITY OF CAMBRIDGE

SEE ATTACHED PLANS

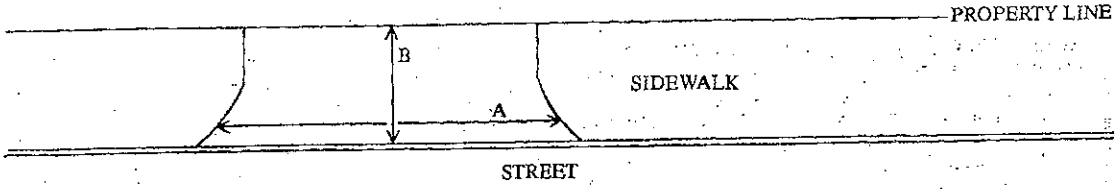

A = _____FT. ÷ 3 = _____YARDS

Area and cost estimates are not applicable because MIT will construct the curb cut and driveway at its sole cost and expense.

B = _____FT. ÷ 3 = _____YARDS

A × B = _____SQUARE YARDS

COST ESTIMATE:

BRICK:_____SQUARE YARDS × $70/SQUARE YARD = $_____

BRICK ON CONCRETE:_____SQUARE YARDS × $85/SQUARE YARD = $_____

CONCRETE:_____SQUARE YARDS × $40/SQUARE YARD = $_____

ASPHALT:_____SQUARE FEET × 1 TON/40 SQUARE FEET × $125/TON = $_____

DEPARTMENT OF PUBLIC WORKS SCHEDULED DATE FOR CONSTRUCTION: / /

DEPARTMENT OF PUBLIC WORKS STATED FEE: $_____

The undersigned agrees to pay the stated fee for the driveway installation in full within two (2) weeks of the estimated starting date of construction before the Department of Public Works shall proceed with construction:

Owner's signature: Massachusetts Institute of Technology By: (AMSTER) Date: 11/19/13

Address: 77 Massachusetts Avenue, Cambridge, MA 02142

Funds Received: $_____ Check Number:_____

3. *Certified Abutters List and Abutters Form*

Please see attached

71/ / 46/ /
MASSACHUSETTS INSTITUTE OF TECHN(
OFFICE OF THE TREASURER
238 MAIN ST., SUITE #200
CAMBRIDGE, MA 02142

53/ / 12/ /
MASSACHUSETTS INSTITUTE OF TECHN(
C/O OFFICE OF THE TREASURER
238 MAIN ST. SUITE 200
CAMBRIDGE, MA 02142

53/ / 64/ /
MASSACHUSETTS INSTITUTE OF TECHN(
C/O OFFICE OF THE TREASURER
238 MAIN ST. SUITE 200
CAMBRIDGE, MA 02142

53/ / 70/ /
MASSACHUSETTS INSTITUTE OF TECHN(
C/O OFFICE OF THE TREASURER
238 MAIN ST. SUITE 200
CAMBRIDGE, MA 02142

53/ / 71/ /
MASSACHUSETTS INSTITUTE OF TECH
C/O OFFICE OF THE TREASURER
238 MAIN ST. SUITE 200
CAMBRIDGE, MA 02142

71/ / 54/ /
MIT 650 MAIN STREET LLC.
C/O MIT INVESTMENT MANG.
238 MAIN ST., SUITE#200
CAMBRIDGE, MA 02142

53-12
MASSACHUSETTS INSTITUTE OF TECHN(
C/O OFFICE OF THE TREASURER
238 MAIN ST. SUITE 200
CAMBRIDGE, MA 02142

53-63
MASSACHUSETTS INSTITUTE OF TECHN(
C/O OFFICE OF THE TREASURER
238 MAIN ST. SUITE 200
CAMBRIDGE, MA 02142

53-64
MASSACHUSETTS INSTITUTE OF TECHN(
C/O OFFICE OF THE TREASURER
238 MAIN ST. SUITE 200
CAMBRIDGE, MA 02142

53-68
MASSACHUSETTS INSTITUTE OF TECHN(
C/O OFFICE OF THE TREASURER
238 MAIN ST. SUITE 200
CAMBRIDGE, MA 02142

53-70
MASSACHUSETTS INSTITUTE OF TECHN(
C/O OFFICE OF THE TREASURER
238 MAIN ST. SUITE 200
CAMBRIDGE, MA 02142

CITY OF CAMBRIDGE

APPLICATION FOR DRIVEWAY CUTS AND OPENINGS
ABUTTOR'S FORM

To Whom It May Concern:

As owner or agent of 41 Albany Street (Map 71, Lot 46),

Cambridge, Massachusetts, I do hereby declare [x] approval [ ] disapproval

of the installment of:

Off-Street Parking Facility located at 38 Albany Street (Map 53, Parcel 12) and 50 Albany Street (Map 53, Parcel 64)

Massachusetts Institute of Technology

Signed: By: [signature] Date: 11/19/13

Address: c/o Office of the Treasurer, 238 Main Street, Suite 200, Cambridge, MA 02142

To Whom It May Concern:

As owner or agent of 36 Albany Street (Map 53, Lot 63),

Cambridge, Massachusetts, I do hereby declare [x] approval [ ] disapproval

of the installment of:

Off-Street Parking Facility located at 38 Albany Street (Map 53, Parcel 12) and 50 Albany Street (Map 53, Parcel 64)

M A CAMSTERO

Massachusetts Institute of Technology

Signed: By: Date: 11/19/13

Address: c/o Office of the Treasurer, 238 Main Street, Suite 200, Cambridge, MA 02142

To Whom It May Concern:

As owner or agent of New York Central (Map 53, Lot 70),

Cambridge, Massachusetts, I do hereby declare [x] approval [ ] disapproval

of the installment of:

Off-Street Parking Facility located at 38 Albany Street (Map 53, Parcel 12) and 50 Albany Street (Map 53, Parcel 64)

Massachusetts Institute of Technology

Signed: By: [signature] Date: 11/19/13

Address: c/o Office of the Treasurer, 238 Main Street, Suite 200, Cambridge, MA 02142

7

CITY OF CAMBRIDGE

APPLICATION FOR DRIVEWAY CUTS AND OPENINGS
ABUTTOR'S FORM

To Whom It May Concern:

As owner or agent of 650 Main Street (Map 71, Lot 54),

Cambridge, Massachusetts, I do hereby declare [x] approval [ ] disapproval

of the installment of:

Off-Street Parking Facility located at 50 Albany Street (Map 53, Parcel 64)

Signed: MIT 650 Main Street LLC By: [signature] Date: 11/19/13

Address: c/o MIT Investment Management, 238 Main Street, Suite 200, Cambridge, MA 02142

To Whom It May Concern:

As owner or agent of 68 Albany Street (Map 53, Lot 71),

Cambridge, Massachusetts, I do hereby declare [x] approval [ ] disapproval

of the installment of:

Off-Street Parking Facility located at 38 Albany Street (Map 53, Parcel 12) and 50 Albany Street (Map 53, Parcel 64)

Signed: Massachusetts Institute of Technology By: [signature] (AMSTER) Date: 11/19/13

Address: c/o Office of the Treasurer, 238 Main Street, Suite 200, Cambridge, MA 02142

To Whom It May Concern:

As owner or agent of _____,

Cambridge, Massachusetts, I do hereby declare [ ] approval [ ] disapproval

of the installment of:

Off-Street Parking Facility located at _____

Signed: _____ Date: _____

Address: _____

7

4. Site Plans

Please see attached

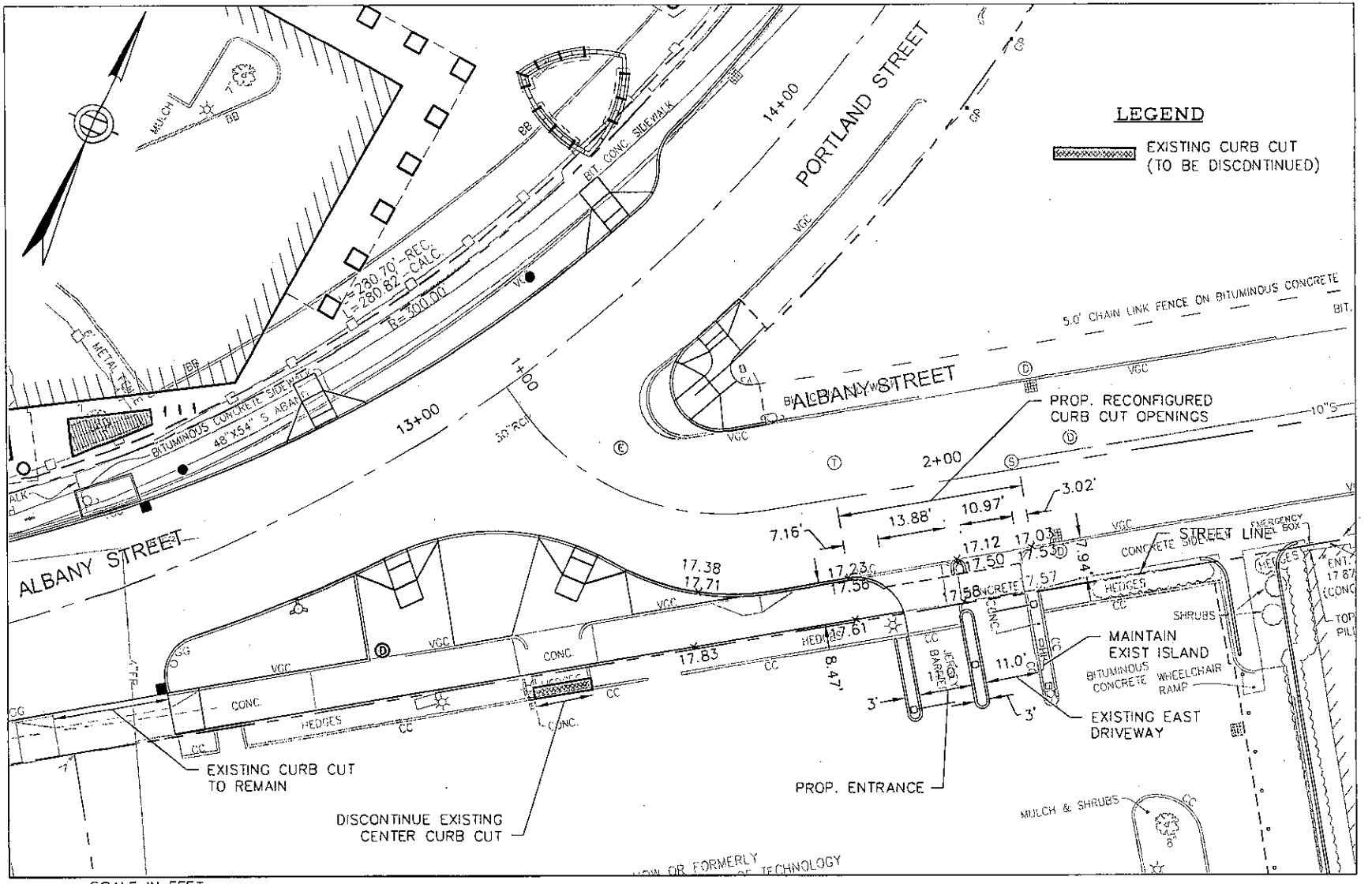

RECONFIGURED CURB CUT - GRADING

REVISED 11/07/13

Nitsch Engineering
www.nitscheng.com
186 Lincoln Street, Suite 200
Boston, MA 02111-2403
T: (617) 338-0063
F: (617) 338-6472

- Civil Engineering
- Land Surveying
- Transportation Engineering
- Sustainable Site Consulting
- Planning
- GIS

CURB CUT PLAN
610 MAIN STREET
CAMBRIDGE, MASSACHUSETTS 02142

PREPARED FOR:
ELKUS MANFEDI ARCHITECTS
300 A STREET, BOSTON, MA 02210

PROJECT #	7149.3
FILE	7149.3CURBCUT
SCALE	As Noted
DATE	09/05/2013
PROJECT MGR.	JB
SURVEYOR	
DRAFTED BY	BG
CHECKED BY	JB

SHEET: 1

CC-3

OF 2

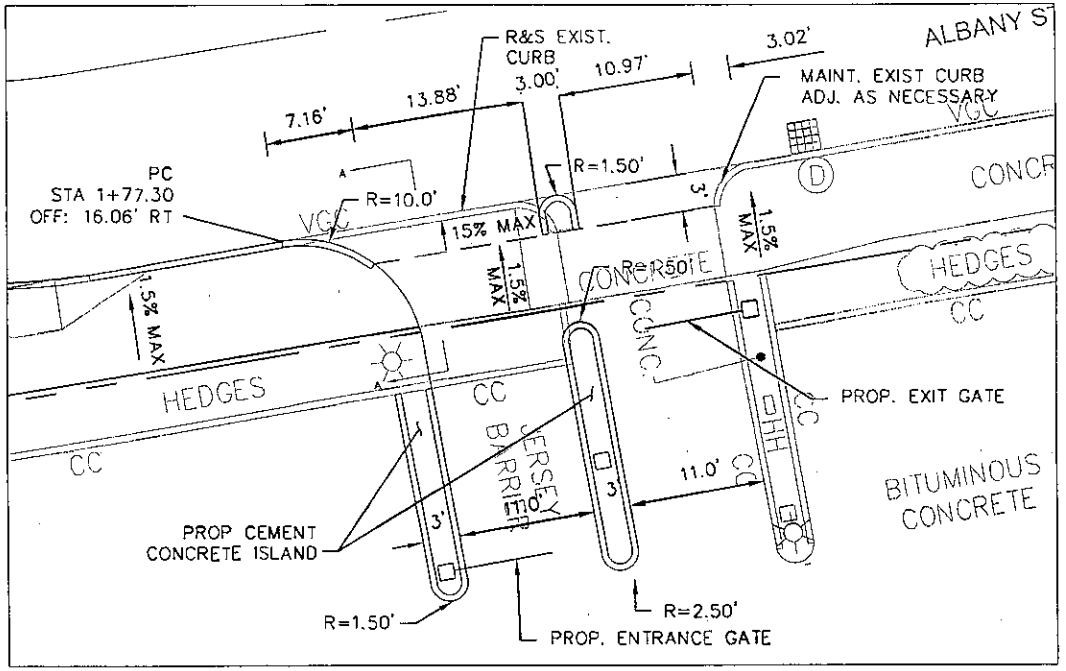

RECONFIGURED CURB CUT - LAYOUT

SCALE IN FEET

1"= 10'

10 5 0 10 20

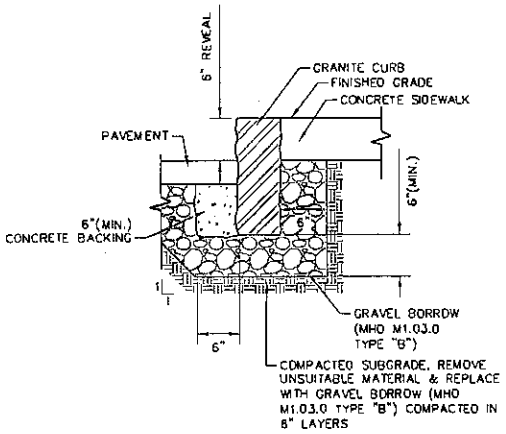

VERTICAL GRANITE CURB SETTING

NOT TO SCALE

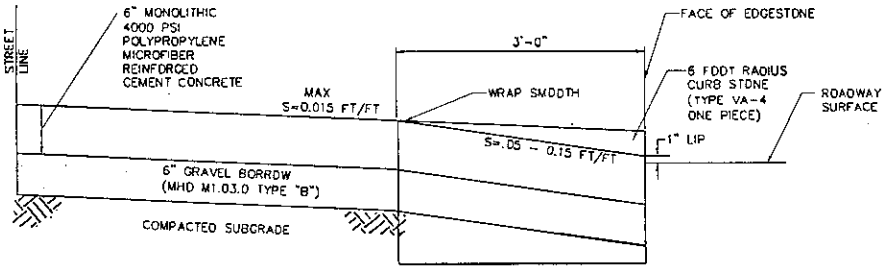

SECTION A–A CONCRETE DRIVEWAY

NOT TO SCALE

REVISED 11/07/13

Nitsch Engineering

www.nitscheng.com
165 Lincoln Street, Suite 200
Boston, MA 02111-2403
T: (617) 338-0063
F: (617) 338-6472

- Civil Engineering
- Land Surveying
- Transportation Engineering
- Sustainable Site Consulting
- Planning
- GIS

CURB CUT PLAN
610 MAIN STREET
CAMBRIDGE, MASSACHUSETTS 02142

PREPARED FOR:
ELKUS MANFEDI ARCHITECTS
300 A STREET, BOSTON, MA 02210

PROJECT #:	7149.3
FILE:	7149.3CURBCUT
SCALE:	As Noted
DATE:	09/05/2013
PROJECT MGR:	JB
SURVEYOR:	
DRAFTED BY:	BG
CHECKED BY:	JB

SHEET: 2

CC-4

OF 2

OFFICE OF THE CITY CLERK

CITY OF CAMBRIDGE
(617) 349-4260
FAX: (617) 349-4269
tty/TDD (617) 492-0235

2013 DEC 11 AM 11 42
OFFICE OF THE CITY CLERK
CAMBRIDGE, MASSACHUSETTS

DONNA P. LOPEZ
CITY CLERK

November 25, 2013

Dear Neighborhood Representative:

This office is in receipt of a copy of an application from Massachusetts Institute of Technology, requesting a curb cut *at the premises numbered **38 Albany Street** and discontinuance of an existing curb cut at the premises numbered **50 Albany Street, Cambridge, Massachusetts.*** The City Council has directed that all curb cut petitions be submitted to the appropriate Neighborhood Associations for the locality where the curb cut would be made, so that the association may have an opportunity for review, prior to action by the City Council.

Please indicate by return mail your approval or disapproval of the petition within twenty-one days from the date of this letter. If the response is "disapproval" please state reasons. Be sure to sign the form and include a daytime phone number. I have enclosed a self-addressed stamped envelope to facilitate your reply.

As soon as this office has received both the completed application and your neighborhood association response, I will place the petition on the agenda for the next City Council meeting. If I do not receive a response from your neighborhood organization by twenty-one days from the date of this letter, I will place the petition on the agenda for the next City Council meeting.

If your neighborhood association cannot complete its review by twenty-one days from today, you may extend the reply time another seven days by requesting an extension by letter to me with a copy to the petitioner. However, I urge you to make every effort to complete your review as soon as possible.

Thank you for your cooperation.

Sincerely yours,
Donna P. Lopez

Donna P. Lopez
City Clerk

Dana Park Neighborhood Association – Bill August

hereby * _____ approve _____ disapprove of said driveway petition.

*Board Comments: voted not to disapprove or approve; no position taken at all by vote of Board of Directors William August

Signature of authorized association representative William August

Daytime telephone no. 617-548-3735 or 617-951-9909

cc: Petitioner