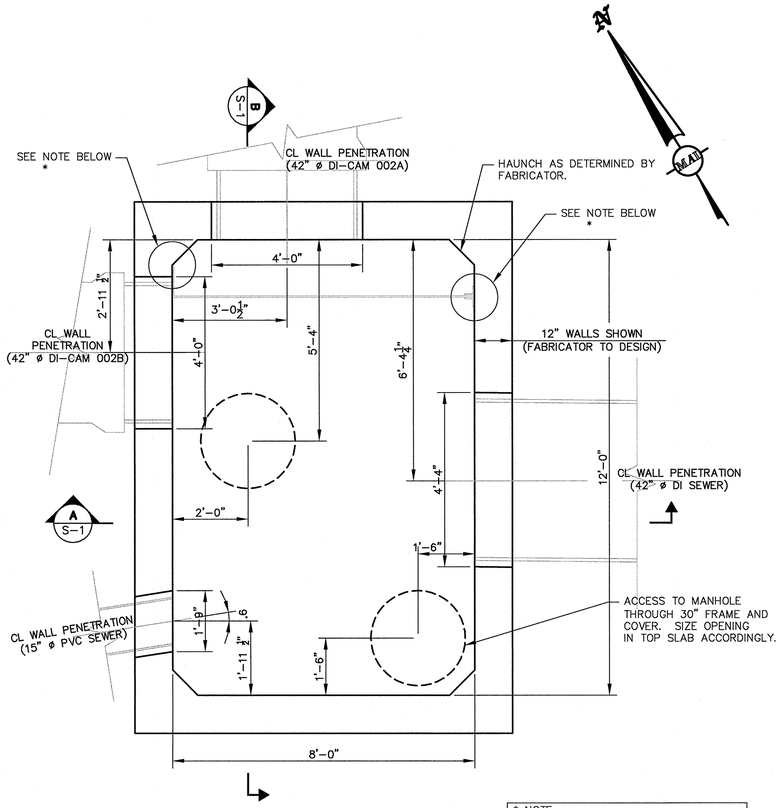


PLAN

SCALE: 1/2" = 1'-0"

* NOTE:

PRECAST FABRICATOR SHALL PROVIDE REBAR CLEAR ZONE TO ENABLE FIELD DRILLING OF THE BAFFLE ANCHOR SUPPORTS. SEE BAFFLE DETAIL SHEET FOR SPACING AND LOCATION OF DRILLED ANCHORS.

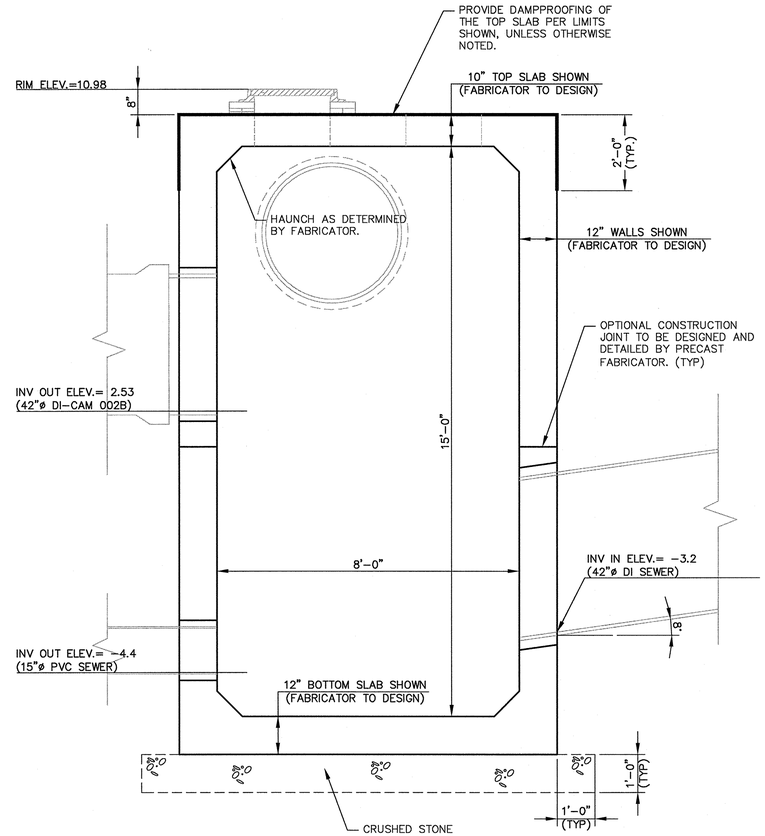


SECTION A S-1

SCALE: 1/2"=1'-0"

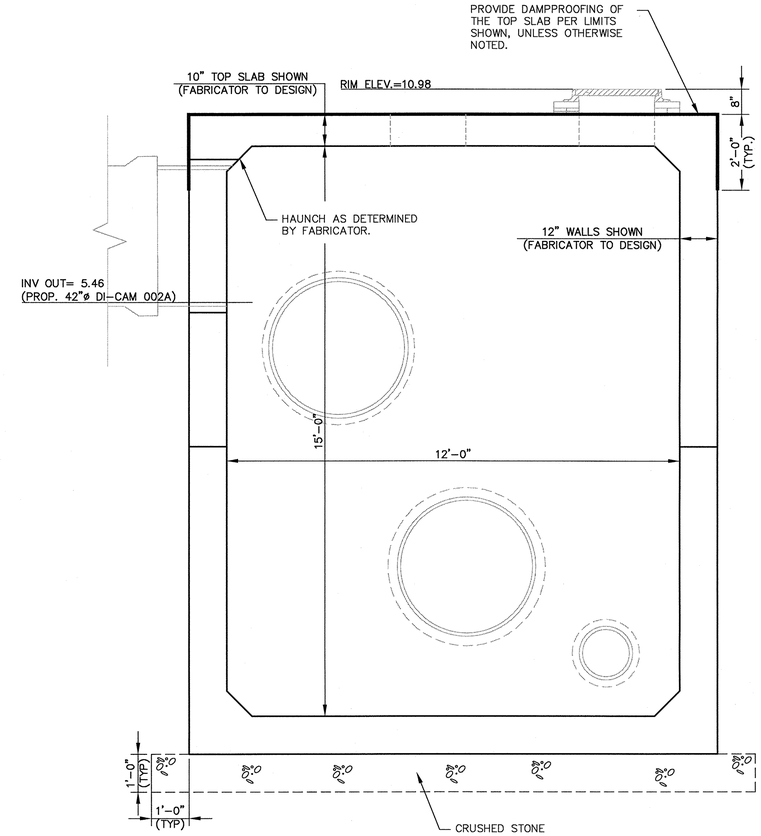


SECTION B S-1

SCALE: 1/2"=1'-0"

# 12' X 8' PRECAST CONCRETE REGULATOR AND FLOATABLES TRAP

GENERAL:

1. THE CONTRACTOR SHALL VERIFY INDIVIDUAL ITEMS AS SPECIFIED WITH OTHER DRAWINGS IN THE CONTRACT PLANS AND SPECIFICATIONS. DISCREPANCIES UNCOVERED, IF ANY, SHALL BE REPORTED BEFORE PRECEDING WITH THE WORK SO THAT PROPER ADJUSTMENTS CAN BE MADE.
2. THE CONTRACTOR SHALL VERIFY LOCATIONS OF EXISITNG PIPES ASSOCIATED WITH THE PRECAST REGULATOR AND FORWARD TO ENGINEER PRIOR TO ORDERING THE PRECAST STRUCTURE TO VERIFY PENETRATION LOCATIONS.

CODES AND SPECIFICATIONS:

ALL WORK INCLUDING DESIGN, CONSTRUCTION, WORKMANSHIP, AND MATERIALS SHALL BE IN ACCORDANCE WITH THE FOLLOWING (IN CASE OF CONFLICT THE MORE STRINGENT SPECIFICATION WILL GOVERN):

1. STANDARD SPECIFICATIONS FOR HIGHWAY BRIDGES (17TH EDITION) ADOPTED BY AASHTO WITH ALL INTERIMS THROUGH 2002.
2. CONFORM TO ACI 350-06 CODE REQUIREMENTS FOR ENVIRONMENTAL ENGINEERING CONCRETE STRUCTURES AND COMMENTARY.

DESIGN LOADS:

1. LIVE LOAD: AASHTO HS20-44.
2. FOR OTHER LOADING CONDITIONS, SEE SPECIFICATIONS 03411 – PRECAST CONCRETE VAULTS AND STRUCTURES, SECTION 2.5 LOADS.

FOUNDATION:

1. THE ENGINEER SHALL BE NOTIFIED TO INSPECT THE FOOTING EXCAVATION WHERE UNSUITABLE MATERIALS ARE PRESENT.
2. NO STRUCTURE SHALL BE PLACED ON FROZEN SOIL.
3. CRUSHED STONE, 12-INCHES THICK, SHALL BE PLACED OVER UNDISTURBED GROUND AT THE BOTTOM OF EXCAVATION TO PROVIDE A WORKING SURFACE AND A STABLE BEARING SURFACE FOR THE CONCRETE STRUCTURES. ENGINEER SHALL BE NOTIFIED TO INSPECT GROUND BEFORE PLACEMENT OF CRUSHED STONE.

CONCRETE:

PER THE SPECIFICATIONS, UNLESS NOTED OTHERWISE IN THE CONTRACT DOCUMENTS, CONCRETE SHALL HAVE A MINIMUM 28 DAY COMPRESSIVE STRENGTH AS FOLLOWS:
CAST-IN-PLACE CONCRETE = (f'c) OF 4000 PSI
PRECAST STRUCTURE CONCRETE = (f'c) OF 5000 PSI

REINFORCING STEEL:

1. REINFORCING STEEL SHALL CONFORM TO THE FOLLOWING ASTM DESIGNATIONS:
   BARS, STIRRUPS AND TIES — ASTM A615 GRADE 60
   WELDED WIRE FABRIC — ASTM A185
2. ALL SPLICES SHALL BE CLASS B SPLICES.
3. ALL REINFORCEMENT SHALL BE CONTINUOUS. STAGGER SPLICES WHERE POSSIBLE.
4. ALL EXPOSED CORNERS OF CONCRETE TO HAVE 3/4" MINIMUM CHAMFER UNLESS NOTED OTHERWISE.
5. REINFORCING IN THE TOP SLAB AND THOSE BENT BARS THAT EXTEND FROM THE WALLS INTO THE TOP SLAB SHALL BE EPOXY COATED.
6. COVER IN THE TOP SLAB SHALL BE 2 INCHES MINIMUM FOR THE TOP MAT REINFORCING AND 1.5 INCH MINIMUM IN THE BOTTOM MAT REINFORCING.
7. COVER FOR WALLS AND BASE SLAB SHALL BE 2 INCHES, UNLESS NOTED.

OPTIONAL CONSTRUCTION JOINT:

1. PRECAST CONSTRUCTION JOINTS ARE OPTIONAL. IF REQUIRED, JOINTS SHALL BE DESIGNED AND DETAILED BY THE PRECAST FABRICATOR. JOINTS SHALL INCLUDE POSITIVE CONNECTION BETWEEN UPPER AND LOWER SECTIONS AS WELL AS BE WATER TIGHT AT BOTH THE INSIDE AND OUTSIDE FACES.

CONFORMED SET


SEA CONSULTANTS INC.
Scientists/Engineers/Architects
CAMBRIDGE, MASSACHUSETTS CONCORD, NEW HAMPSHIRE
ROCKY HILL, CONNECTICUT AUGUSTA, MAINE
FRAMINGHAM, MASSACHUSETTS

MWH
BOSTON
MASSACHUSETTS


COMMONWEALTH OF MASSACHUSETTS CHARLES SACRE 39022 REGISTERED PROFESSIONAL ENGINEER 01/15/2010

| | | | | |
|---|---|---|---|---|
| Scale | AS NOTED | | | |
| Date | JANUARY 15, 2010 | | | |
| Job No. | 1006250 | | | |
| Designed by | MAC | | | |
| Drawn by | MAC | | | |
| Checked by | WRB | No. | Description | Date |
| Approved by | CS | | REVISIONS | |

THE WORKS — CAMBRIDGE DEPARTMENT OF PUBLIC WORKS

CITY OF CAMBRIDGE, MA

ALEWIFE BROOK FLOATABLES CONTROL (CONTRACT 4)
AND CAM 400 SEWER SEPERATION PROJECT (CONTRACT 13)

CAM 002 REGULATOR & FLOATABLES CONTROL
12' X 8' PRECAST STRUCTURE

Sheet No. S-1

File No.

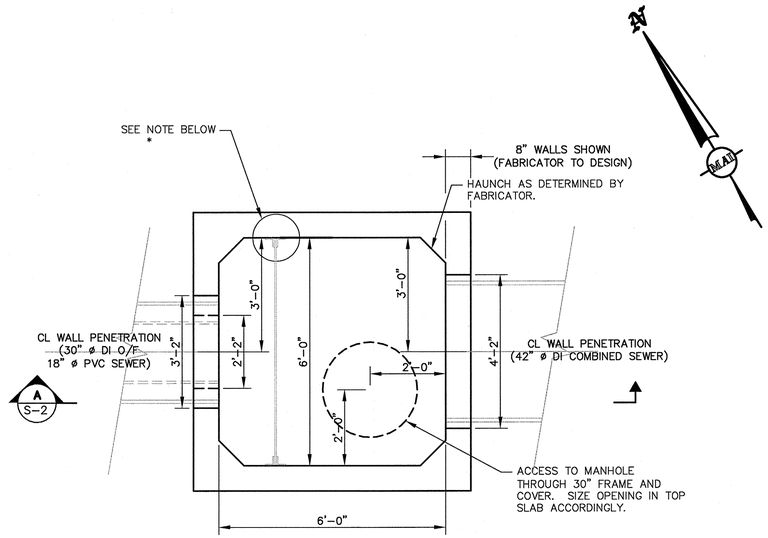


* NOTE:

PRECAST FABRICATOR SHALL PROVIDE REBAR CLEAR ZONE TO ENABLE FIELD DRILLING OF THE BAFFLE ANCHOR SUPPORTS. SEE BAFFLE DETAIL SHEET FOR SPACING AND LOCATION OF DRILLED ANCHORS.

PLAN
SCALE: 1/2" = 1'-0"

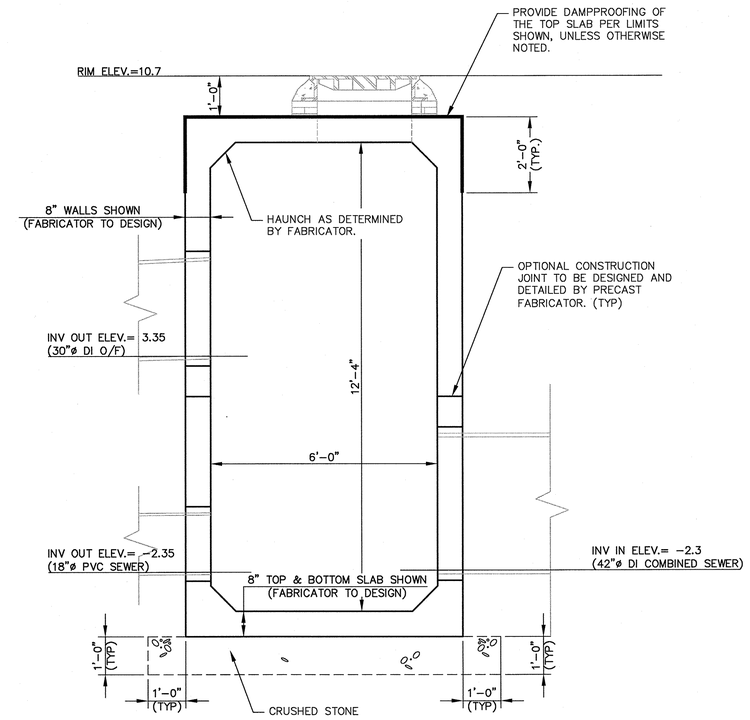


SECTION A S-2
SCALE: 1/2"=1'-0"

# 6' X 6' PRECAST CONCRETE CSO REGULATOR AND FLOATABLES TRAP

* SEE SHEET S-1 FOR GENERAL NOTES AND ADDITIONAL INFORMATION THAT APPLIES TO CAM 401B.

CONFORMED SET


SEA
SEA CONSULTANTS INC.
Scientists/Engineers/Architects
CAMBRIDGE, MASSACHUSETTS CONCORD, NEW HAMPSHIRE
ROCKY HILL, CONNECTICUT AUGUSTA, MAINE
FRAMINGHAM, MASSACHUSETTS

MWH
BOSTON
MASSACHUSETTS


COMMONWEALTH OF MASSACHUSETTS CHARLES SACBEY No. 34022 REGISTERED PROFESSIONAL ENGINEER 01/19/2010

| | |
|---|---|
| Scale | AS NOTED |
| Date | JANUARY 15, 2010 |
| Job No. | 1006250 |
| Designed by | MAC |
| Drawn by | MAC |
| Checked by | WRB |
| Approved by | CS |

| No. | Description | Date |
|---|---|---|
| | REVISIONS | |

THE WORKS
CAMBRIDGE DEPARTMENT OF PUBLIC WORKS

CITY OF CAMBRIDGE, MA
ALEWIFE BROOK FLOATABLES CONTROL (CONTRACT 4)
AND CAM 400 SEWER SEPERATION PROJECT (CONTRACT 13)
CAM 401B REGULATOR & FLOATABLES CONTROL
6' X 6' PRECAST STRUCTURE

Sheet No. S-2
File No.

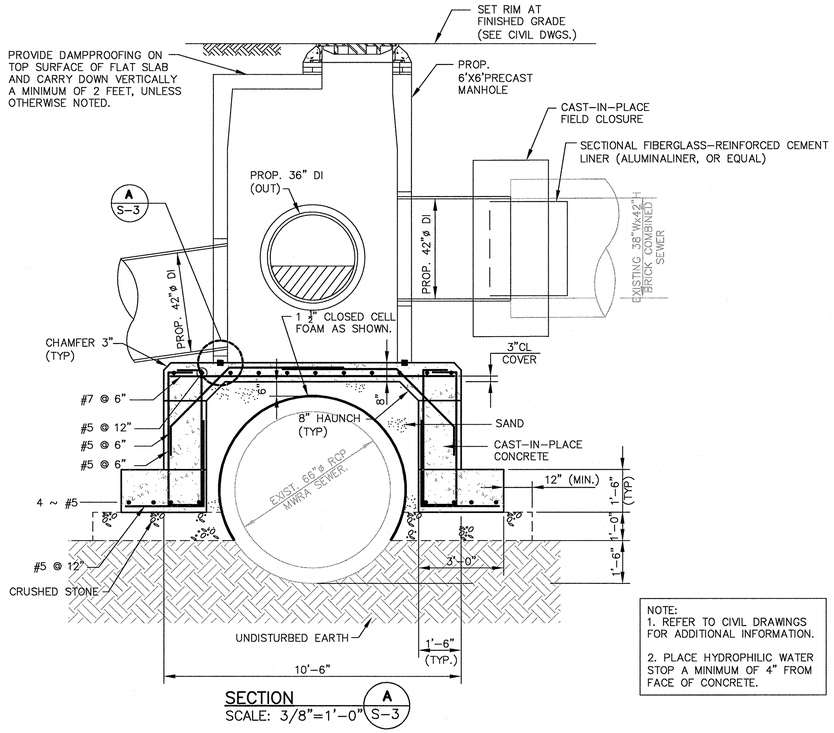


SECTION A S-3
SCALE: 3/8"=1'-0"

NOTE:
1. REFER TO CIVIL DRAWINGS FOR ADDITIONAL INFORMATION.
2. PLACE HYDROPHILIC WATER STOP A MINIMUM OF 4" FROM FACE OF CONCRETE.

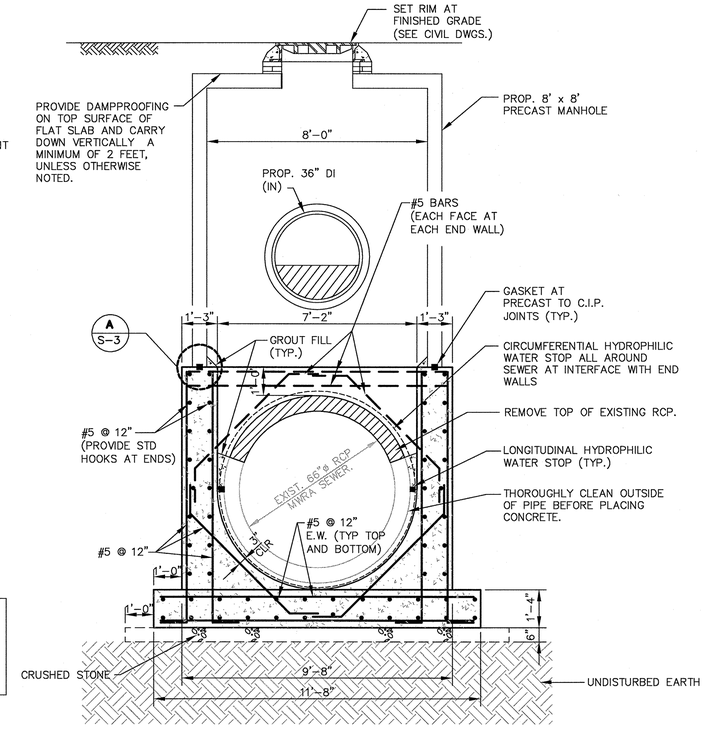


SECTION B S-3
SCALE: 3/8"=1'-0"

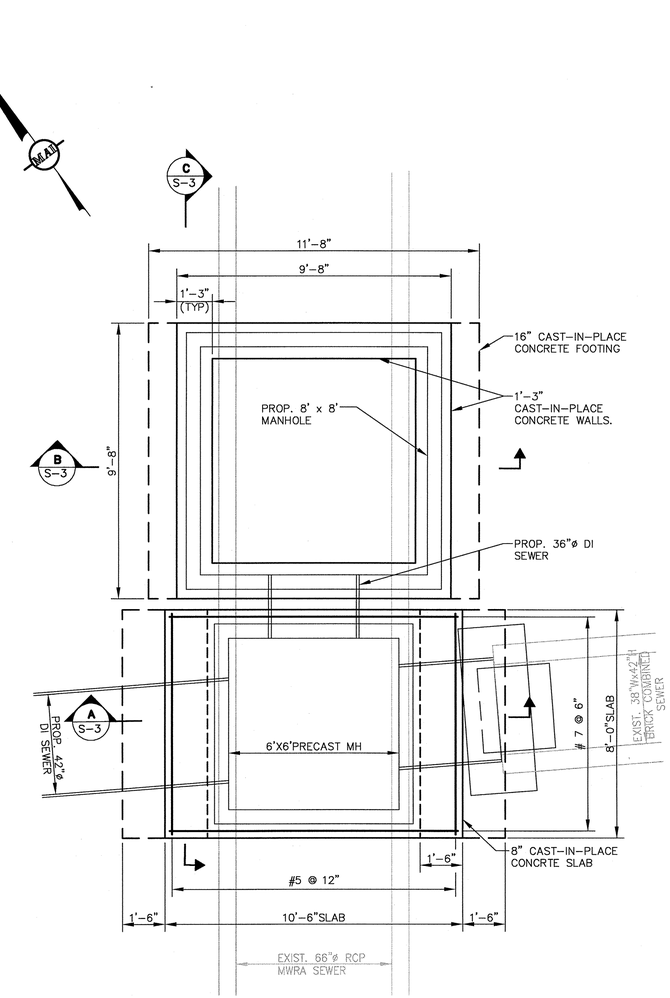


PLAN
SCALE: 3/8" = 1'-0"

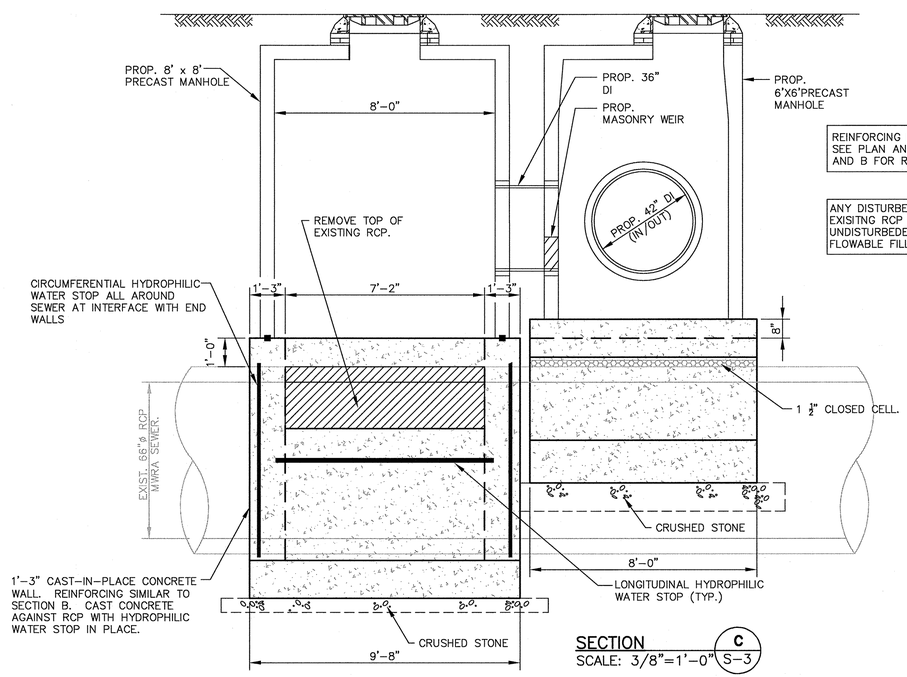


REINFORCING NOT SHOWN. SEE PLAN AND SECTIONS A AND B FOR REINFORCING.

ANY DISTURBED SOILS BELOW THE SPRINGLINE OF THE EXISITNG RCP SHALL BE CLEANED TO AN UNDISTURBEDED CONDITION AND BACKFILLED WITH FLOWABLE FILL.

SECTION C S-3
SCALE: 3/8"=1'-0"

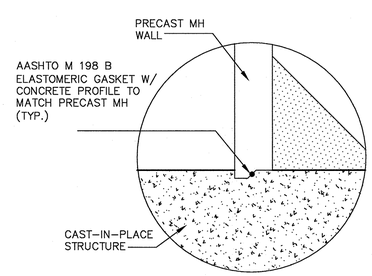


DETAIL A S-3
N.T.S.

CONFORMED SET

SEA
SEA CONSULTANTS INC.
Scientists/Engineers/Architects
CAMBRIDGE, MASSACHUSETTS CONCORD, NEW HAMPSHIRE
ROCKY HILL, CONNECTICUT AUGUSTA, MAINE
FRAMINGHAM, MASSACHUSETTS

MWH
BOSTON
MASSACHUSETTS

COMMONWEALTH OF MASSACHUSETTS
CHARLES SAORE
#34002
REGISTERED PROFESSIONAL ENGINEER
01/15/2010

| | | | | |
|---|---|---|---|---|
| Scale | AS NOTED | | | |
| Date | JANUARY 15, 2010 | | | |
| Job No. | 1006250 | | | |
| Designed by | MAC | | | |
| Drawn by | MAC | | | |
| Checked by | WRB | No. | Description | Date |
| Approved by | CS | | REVISIONS | |

THE WORKS
CAMBRIDGE DEPARTMENT OF PUBLIC

CITY OF CAMBRIDGE, MA
ALEWIFE BROOK FLOATABLES CONTROL (CONTRACT 4)
AND CAM 400 SEWER SEPERATION PROJECT (CONTRACT 13)
CAM 002 REGULATOR AND FLOATABLES CONTROL
MASONRY AND REINFORCING DETAILS

Sheet No. S-3
File No.