**File No. 6882- Supply, Furnish and Install Custom Planters/Benches for the Martin Luther King Junior School- Thursday, July 16, 2015 @ 11:00 AM.**

| | |
|---|---|
| **INVITATION FOR BID** | **If, at the time of the scheduled bid opening, City Hall is closed due to uncontrolled events such as fire, snow, ice, wind, or building evacuation, the bid opening will be postponed to the same time on the next normal business day. Bids will be accepted until that date and time.** |
| **FILE NO:** 6882 | |
| **COMMODITY: Supply, Furnish and Install Custom Planters/Benches for the Martin Luther King Junior School** | |
| **NAME OF BIDDER:** | |
| **BIDDER'S FED. ID.** | |

TO: Amy L. Witts. Purchasing Agent PH: (617)349-4310 FX: (617)349-4008
795 Massachusetts Avenue, Room 303
Cambridge, MA 02139

The undersigned submits this sealed bid to provide the commodity or services identified above, described in the specifications herein and advertised in the **CAMBRIDGE CHRONICLE** on **Thursday, June 11, 2015** which is to be opened and publicly read at the Office of the Purchasing Agent, City Hall, 795 Mass. Ave., Room 303, Cambridge, MA at 11:00 a.m. originally scheduled for **Thursday**, **June 25, 2015 and rescheduled to Thursday, July 16, 2015. Parking is limited at this location. It is strongly recommended that bids are mailed or delivered in advanced of the due date and time. Late proposals will not be accepted. This bid may be downloaded from the City's web site, www.CambridgeMA.gov, Online Services, Purchasing Bid List, Invitation for Bid, File No. 6882.**

The undersigned certifies that this bid is made without collusion with any other person, firm or corporation making any other bid or who otherwise would make a bid. The undersigned agrees to furnish the commodity or services in strict accordance with the bid documents, which consist of this Invitation for Bid and all attachments hereto. **"The submitted bid must be without conditions, exceptions or modifications to the bid document".**

The envelope containing the bid must be labeled: "This envelope contains a bid for **Supply, Furnish and Install Custom Planters/Benches for the Martin Luther King Junior School** opened at 11:00 A.M. on Thursday, July 16, 2015". The bid and all documents submitted with it are public records. This bid process and the award of the contract are made in conformity with M.G.L. c. 30B, unless otherwise stated. See other side of this form for General Terms and Conditions that shall become part of any Contract awarded through this Invitation for Bid.

**This bid includes addenda numbered:**_____

**SIGNATURE OF BIDDER**:_____

**TITLE OF SIGNATORY**_____

**ADDRESS OF BIDDER**_____

**TELEPHONE NUMBER**_____**FAX NUMBER:**_____

Please check one of the following and insert the requested information:

( ) Corporation, incorporated in the State of:_____

( ) Partnership. Names of partners:_____

( ) Individual:_____

**Name of Bidder:**_____

## GENERAL TERMS AND CONDITIONS

**LAWS**: All deliveries shall conform in every respect with all applicable laws of the Federal government, Commonwealth of Massachusetts and City of Cambridge.

The Vendor in the performance of the contract shall not discriminate on the grounds of race, color, religious creed, national origin or ancestry, age, isability,sexual orientation, marital status, family status, military status, source of income, or sex in employment practices or in the selection or retention of subcontractors, and in the procurement of materials or rental of equipment. The City may cancel, terminate or suspend the contract in whole or in part for any violation of this paragraph

**TAXES**: Purchases made by the City are exempt from the payment of Federal excise tax and the payment of Commonwealth of Massachusetts sales tax (except for gasoline) and any such taxes must not be included in the bid prices.

**QUANTITIES:** Unless otherwise stated, the quantities set forth herein are ESTIMATES ONLY. The City reserves the right to purchase the commodity(ies) specified in any amount less than the estimated amount.

**BID PRICES**: Bid prices shall include transportation and delivery charges fully prepaid to the City of Cambridge destination. Where the unit price and the total price are at variance, the unit price will prevail.

**DELIVERY AND PACKAGING:** Deliveries must be made in such quantities as called for in the purchase order and in the manufacturer's original packages. All deliveries must be **"inside" delivery with no assistance from City personnel. Tailgate deliveries will not be accepted.** Rejected material will be returned to the vendor at the vendor's expense.

**MODIFICATION OF BIDS**: Prior to bid opening, a bidder may correct, modify or withdraw its bid by making the request in writing prior to the time and date for the bid opening. All corrections and modifications must be delivered to the Purchasing Department in a sealed envelope indicating that it contains a modification or correction of the original bid submitted for the particular commodity and indicating the time and date of the bid opening.

**REJECTION OF BIDS:** The City reserves the right to reject any and all bids if it is in best interest of the City to do so.

**AWARD OF CONTRACT**: Contract(s) will be awarded within forty-five days of the bid opening unless award date is extended by consent of all parties concerned.

**INDEMNITY**: Unless otherwise provided by law, the Vendor will indemnify and hold harmless the City against any and all liability, loss, damages, costs or expenses for personal injury or damage to real or tangible personal property which the City may sustain, incur or be required to pay, arising out of or in connection with the performance of the Contract by reason of any negligent action/inaction or willful misconduct by the Contractor, its agents, servants or employees

**TERMINATION OF CONTRACT:** Except as otherwise provided in the Articles of Agreement, the City may terminate the contract upon seven days notice.

**ASSIGNABILITY:** The Vendor shall not assign, sell, subcontract or otherwise transfer any interest in this contract without the prior written consent of the City.

**MATERIAL SAFETY DATA SHEETS**: Pursuant to M.G.L. c. 111F, ss. 8, 9, and 10, any vendor who receives a contract resulting from this invitation agrees to submit a Material Safety Data Sheet for each toxic or hazardous substance or mixture containing such substance when deliveries are made. The vendor agrees to comply with all requirements set forth in the pertinent laws above.

**Name of Bidder:**_____

**File No. 6882- Supply, Furnish and Install Custom Planters/Benches for the Martin Luther King Junior School- Thursday, July 16, 2015 @ 11:00 AM.**

**To: Amy L. Witts, Purchasing Agent**
**City Hall, 795 Massachusetts Ave**

The undersigned hereby proposes to Supply, Furnish, and Install Custom Planters/Benches for the Martin Luther King Jr. School, 100 Putnam Avenue, Cambridge, MA 02139 all in accordance with the attached specifications and following proposal schedule.

One contract will be awarded as a result of this Invitation for Bid. A contract will be awarded to the responsive and responsible bidder offering the lowest total price. **Prices must remain FIRM during the entire contract period.**

Contract will be awarded within forty-five days of the bid opening, unless award date is extended by consent of all parties concerned.

Prior to bid opening, a bidder may correct, modify, or withdraw its bid by making the request in writing prior to the time and date of the bid opening. All corrections and modifications must be delivered to the Purchasing Department in a sealed envelope with a notation on the envelope indicating that it contains a modification or correction of the original bid submitted for the particular commodity and indicating the date and time of the bid opening.

**A sample contract is attached hereto. The bidder must be willing to sign the City's contract. The City will not accept a bidder's terms & conditions.**

**PLEASE SUBMIT YOUR BID IN DUPLICATE.**

**Questions**
Questions including any exceptions to the specifications, concerning this Invitation for bid must be submitted in writing and faxed to Amy L. Witts, Fax # 617-349-4008. All questions must be submitted no later than **Thursday, July 9, 2015 by 4:00 PM**. An Addendum will be posted to the website to notify all bidders of the questions and answers. Please check the website for Addendums before submitting your bid to the City. Bidders will not be notified individually of Addendums.

Please check the bidders list on the website. If your firm is not listed on the bidders list click on "registry" and notify us that you have downloaded the bid document.

**Bid Results**
The tab sheet and the contract award information will not be mailed to the bidders individually. A tab sheet with the bid results will be posted to the website soon after the bid opening. The tab sheet will include the "contract award" information as soon as it is determined.

**Living Wage Requirements**
The City of Cambridge has a Living Wage Requirement that establishes minimum hourly rates for all Personnel that work on any City contract. The City of Cambridge's Living Wage as of March 1, 2015 is $14.95 per hour. The Living Wage Requirements are attached. The Living Wage is required for services performed under the contract awarded for which Prevailing Wage Rates do not apply.

**Name of Bidder:**_____

**Confidentiality and Public Record Law**

All bids or other materials submitted by the vendor in response to this invitation to Bid will be open for inspection by any person and in accordance with the Massachusetts Public Record Law.

**Insurance Requirements**

***Worker's Compensation.***

*(Reference: M.G.L. c.149 §34A). Before commencing performance of the Contract, the* ***Contractor*** *provide by insurance for the payment of compensation and the furnishing of other benefits under M.G.L. C. 152 to all persons to be employed under the Contract, and the* ***Contractor*** *shall continue such insurance in full force and effect during the term of the Contract. Sufficient proof of compliance with this paragraph must be furnished at the time of execution of this Contract.*

***Additional Insured.*** ***Each policy must list the City of Cambridge as an additional named insured.***

***Insurance Rating.*** *Any insurance carrier utilized to fulfill the insurance requirements of this Contract shall have a minimum A.M. Best rating of A-X.*

***Premiums.*** *The* ***Contractor*** *must provide the required insurance at its own expense.*

***Notice of Occurrence.*** *Notice of occurrence shall be given to the* ***City*** *Manager,* ***City*** *of Cambridge,* ***City*** *Hall, 795 Massachusetts Avenue, Cambridge, MA 02139 and, at the option of the* ***Contractor****, any other* ***City*** *official permitted by law to receive notice.*

***Waiver of Subrogation.*** *The* ***Contractor*** *and all Subcontractors waive subrogation rights against the* ***City*** *for all losses.*

***Coverage Period.*** *Each insurance policy must cover the ent*ire contract period.

***Policies and Limits.*** *The insurance required shall include all major division of coverage and shall be on a comprehensive general basis including Premises and Operations (including X-C-U), Owner's Protective (as a separate policy), Products and Completed Operations, and Owned, Non-owned, Leased, and Hired Motor Vehicles. Such insurance shall be written for not less than any limits of liability required by law or the following limits, whichever are greater:*

| | |
|---|---|
| *Owner's Protective Liability* | |
| *Each Occurrence* | *$500,000* |
| *Aggregate* | *$1 Million* |
| *Commercial Liability* | |
| *General Aggregate* | *$1 Million* |
| *Products Completed Operations Aggregate* | *$500,000* |
| *Personal Injury and Advertising Limit* | *$500,000* |
| *Each Occurrence* | *$500,000* |
| *Automotive-for all owned, non-owned, hired and leased vehicles* | |
| *Combined single limit* | *$500,000* |
| *or* | |
| *Bodily injury- each person* | *$100,000* |
| *each accident* | *$500,000* |
| *Property damage-each occurrence* | *$500,000* |

| | | |
|---|---|---|
| *Umbrella* | | |
| *Combined single limit* | | *$500,000* |
| *General aggregate* | | *$500,000* |
| *Worker's Compensation* | | |
| *Coverage A* | ***Statutory*** | |
| *Coverage B* | *Each Accident* | *$100,000* |
| | *Disease-Policy limit* | *$500,000* |
| | *Disease-Each Employee* | *$100,000* |

***Excess Liability Insurance.***
*The **Contractor** may purchase and maintain excess liability insurance in the umbrella form in order to satisfy the limits of liability required for the insurance to be purchased and maintained in accordance with the requirements set forth above. Any such amounts must be in addition to the umbrella limits required, must list all underlying policies, and must list the **City** as a named insured. Evidence of such excess liability shall be delivered to the **City** in the same form and manner as the required insurance policies.*

***Amendment of Insurance Requirements.***
*The City reserves the right, at is sole discretion, to amend the insurance requirements contained herein.*

***Occurrence Basis***
*All insurance shall be written on an occurrence basis, unless the **City** approves in writing coverage on a claims-made basis. Coverages whether written on an occurrence or a claims-made basis shall be maintained without interruption from the date of commencement of the Work until the date of final payment and termination of any coverage required to be maintained after final payment.*

***Certificates of Insurance.***
*Certificates of Insurance acceptable to the **City** and confirming the insurance coverage required herein are attached to the Contract. The City shall have no obligation to execute the Contract and may award the Contractor to the next lowest responsible and responsive bidder, if such insurance certificates have not been provided to the City within five (5) business days after presentation of the Contract to the Contractor for execution.*

***Endorsements***
*The **Contractor** shall furnish to the **City** copies of any endorsements that are subsequently issued amending limits of coverage.*

***Property Insurance***
*The City does not intent to purchase property insurance covering the Project or the Work. The Contractor shall not be required to provide such insurance, but the Contractor may, if it so desires, procure property insurance which will protect the interests of the Contractor, Subcontractor and Sub-subcontractors in the Work. The Contractor understands that such property insurance is solely the Contractor's responsibility, and the Contractor, its Subcontractors and Sub-subcontractors shall have no claim against the City on account of the City's failure to provide such property insurance. The Contractor shall promptly replace all damaged Work in which it ir its Subcontractors and Sub-subcontractors have an insurable interest, and all Work which is stolen, vandalized, or damaged due to the Contractor's failure to protect the site as required by Article 5, at no additional cost to the City, whether or not the Contractor procures property insurance with respect to such Work as hereinabove provided.*

**Custom Planters/Benches – General Conditions**

1. **Scope of Services**

1.1. The City of Cambridge is requesting bids from qualified companies to Supply, Furnish, and Install Custom Planters/Benches for the Martin Luther King Jr. School, 100 Putnam Avenue, Cambridge, MA 02139 all in accordance to the products listed herein and the time and place stipulated as herein set forth. The items are to be received by the City of Cambridge in perfect condition.

2. **Manufactures Warranty**

2.1. All products must have a warranty for the minimum yearly manufacturer's specification and shall meet the following warranty: 5 year Minimum.

2.2. The bidder must provide a guarantee for installation for a period of one year after completion of delivery and installation and acceptance by the City of Cambridge. This guarantee shall be included in the bidder's proposal. If longer guarantees are available, this shall be stated in the bidder's proposal.

3. **Delivery**

3.1. Deliveries must be made in such quantities as called for in the Price Proposal and in the manufacturer's original packages. All deliveries must be "inside and in place" delivery with no assistance from City personnel. The Bidder shall be required to have a person designated as a Project Manager who shall be responsible for coordinating all deliveries with Point Line Space, Inc. Tailgate deliveries ***will not be accepted***. Rejected material will be returned to the vendor at the vendor's expense.

3.2. ***Due to the restrictive nature of this urban site, no tractor trailer deliveries will be allowed.*** All deliveries shall be made by box trucks only.

4. **Installation**

4.1. **Delivery/Installation dates: Month of September 2015.** The installation may be performed earlier than as indicated if allowed by the City at no additional cost to the City.

4.2. The installation of furniture shall be performed during normal business hours, Monday through Friday, 7:00 am to 3:30 pm. Any deviation must be at the expense of the contractor including the expense of City of Cambridge employees. The intent is to have all installations performed during normal business hours and should be bid accordingly with the appropriate number of installers. All furniture must be delivered, assembled and put in place for acceptance within one week of delivery.

4.3. **Prevailing Wage Rates**: If the installation of an item requires drilling and/or fastening of an item to the building the Bidder must comply with the provisions of the Prevailing Wage Law for this portion of the work. The applicable prevailing wage sheets are attached.

4.4. **Second Shift Installation Alternate:** Bidder shall provide the added cost for performing installation on second shift. Second shift is defined as Monday through Friday 3:30 pm to 11:00 pm. The cost shall be a lump sum cost per day and included on the appropriate line of the Price Proposal. The City would exercise this option with a minimum of 5 business days notice. If no second shift option is used, the daily cost would be deducted from the contract total value.

4.5. The Bidder shall assume that an elevator will be available for the delivery of furniture.

4.6. The Bidder shall be responsible for assembling and locating all furnishings in rooms as indicated on the Price Proposal Form.

4.7. The Bidder shall be responsible for removing all packaging materials and self-generated trash on a daily basis to a dumpster. The Bidder shall be responsible for providing all dumpster(s) for recycling each type of debris that will be generated (wood, plastic, metal, etc.). The location of the dumpster(s) shall be coordinated with the City prior to delivery. The vendor shall be responsible for providing the City with all trucking manifests indicating the site and weight of each dumpster and type of recycled debris.

4.8. No eating or drinking shall be allowed in the building during the installation except on designated areas. Smoking is not allowed on any school property.

4.9. The bidder shall be responsible for broom cleaning all classrooms and hallways after installation is complete.

4.10. The Bidder shall be responsible for all costs associated with damage to the building. The Bidder shall be responsible to pay for any damages, dents, scuffs, no matter how minor, caused by the movement if its materials, labor and installation. If repairs are required, the general contractor shall be responsible for the repairs. The Bidder will be responsible for the cost of the repairs. Final payment shall not be made until all damages have been repaired by the general contractor to the satisfaction of the Designer/City.

5. **Storage charges**

5.1. The storage charges from the time of the bidder's receipt of product until August 28, 2015 shall be included in the unit price and the total price referenced on the proposal.

5.2. In case of a delay of the project the bidder shall provide to the City the cost for monthly storage charges. (A month is defined as 4 weeks) Please reference the optional item (Storage) list in the price proposal section. The vendor shall be responsible to make arrangements for storage and for the delivery of product in storage. The responsibility of the furniture in storage remains with the bidder until the furniture has been received, in place and accepted by the City.

5.3. If the delay caused by the City of Cambridge is less than a month, the actual delay time shall be prorated (up) to the nearest week.

6. **Project Manager Requirement**

6.1. The Contractor represents that the Project Manager named below will be assigned to the performance of the Contractor's obligations under this Contract. The service for the named individual shall be required unless the individual becomes unavailable to the Contractor for one of the following reasons: death, disability or termination of the underlying employment relationship. If the individual named in this section becomes unavailable for any of the above reasons the Contractor shall give the City the resume

of a proposed replacement. If the City is not reasonably satisfied the proposed replacement has comparable ability and experience the City shall notify the Contractor. The Contractor shall then propose another replacement. The City shall have the right to require the Contractor to remove any key individual from his or her assignment to this Contract for cause.

| **Name** | **Title** | **Phone** | **Email** |
|---|---|---|---|
| _____ | _____ | _____ | _____ |

7. **City of Cambridge Documents**

7.1. In addition to this Price Proposal are the attached documents required by the City of Cambridge to be included as part of this proposal. The awarded Contractor will be bound to all terms and conditions as stated in these documents, in addition to terms and conditions stated above.

8. **Product Specifications**

8.1. General: Planters/Benches shall be designed for plantings up to 10' in height and for use on terraces, entryways, rooftop gardens or green roofs.

8.2. Submittals

8.2.1. Product Data: For each type of product indicated. Include construction details, material descriptions, dimensions of individual components and profiles, and finishes.

8.2.2. Samples for Verification: For each type of exposed finish required, in manufacturer's standard sizes.

8.2.3. Operation and Maintenance Data: For each product indicated.

8.2.4. Warranty: Special warranties included in this Section.

8.3. Quality Assurance

8.3.1. Installer Qualifications: Manufacturer's authorized representative who is trained and approved for installation of units required for this Project.

8.3.2. Product Options: Information on Drawings and in Specifications establishes requirements for performance characteristics. Performance characteristics are indicated by criteria subject to verification by one or more methods including preconstruction testing, field testing, and in service performance.

8.4. Planters

8.4.1. Planters shall be constructed using an anodized aluminum frame and structurally insulated panels (R-14).

8.4.2. The core of the panel consists of high density expanded polystyrene (EPS) covered on both sides with fiberglass panels. The EPS core shall provide shear strength and the aluminized fiberglass "skin" shall provide high compressive strength and puncture resistance. EPS product shall be inert and fire resistant.

8.4.3. Planters shall come equipped with bottom flow drainage system.

8.4.4. Planters shall use a passive irrigation system that allow the fibrous roots of the plants to take water from the soil/water interface 3" above the bottom of the planter. Channels on the sidewalls shall allow air to circulate to the water in the sump and flow through the soil in the planter.

8.4.5. Planter frame shall be exposed aluminum channels that enclose the insulated panels on all sides and adhered with primer-less, structural adhesive for metals, Extreme 310 or equal.

8.4.6. Adjoining planters shall be mechanically fasten together with stainless steel carriage bolts, washers and lock nuts; and with a polyurethane adhesive/sealant, 3M Marine Adhesive Sealant 5200 or equal.

8.4.7. Planters shall be installed on adjustable 6" pedestals, Bison Screwjack B-Series or equal.

8.5. Benches – provided where shown on the drawings

8.5.1. Bench shall be constructed of 1" x 3" IPE deck wood with eased edges and supported on ¼" aluminum angle brackets.

8.5.2. Front edged return shall use a 2" x 2" aluminum angle for support under and behind the IPE wood deck.

8.6. Finishes

8.6.1. Insulated panel – standard finish with color to be selected by the Architect.

8.6.2. Aluminum frame and bench support – painted to match insulated panel.

8.7. Installation

8.7.1. Install planters/benches in accordance with approved shop drawings and manufacturer's written installation instructions.

8.7.2. Installation schedule to be coordinated through the Architect and Owner and will be done prior to the installation of outdoor deck pavers.

8.7.3. Provide startup training for Owner as required for each product.

8.8. Protecting and Cleaning

8.8.1. Provide temporary covering of planters/benches until time of acceptance by the Owner and/or designated representative.

8.8.2. Use type of covering approved by manufacturer that will effectively protect equipment from abrasion, breakage, or other damage.

8.8.3. Clean planters/benches immediately before date scheduled for inspection intended to establish date of acceptance by the Owner and/or designated representative. Use methods and cleaning materials recommended by manufacturer, taking care not to scratch or damage coatings.

**Quality Requirements**

**A. "NO" response, a failure to respond, or a failure to meet the following Quality Requirement will result in a rejection of your bid.**

1. Bidder has five years of experience selling and Installing Custom Planters/Benches

**YES** **No**

**Bid Submission Requirements**

1. Bidders shall provide 3-5 references of current clients for whom bidder has furnished and installed similar type of custom planters/benches.

_____

Company Name Contact Name Telephone number Email address

_____

Company Name Contact Name Telephone number Email address
Email Address

_____

Company Name Contact Name Telephone number Email address

_____

Company Name Contact Name Telephone number Email address

_____

Company Name Contact Name Telephone number Email address

**PRICE PROPOSAL SUMMARY**

Please submit a price for all items as documented herein and the additional items listed below:

| | |
|---|---|
| Lump Sum for Products as specified and shown on the attached documents and drawing(s) | $ _____ |
| Lump Sum for Delivery and Installation Charges (If not included in the unit price) | $ _____ |
| Storage ***per Month*** (If required) See Section 5. 2 | $_____ One Month (4 weeks) |
| Second Shift Installation Lump Sum ***per day*** (if required) | $_____ Lump Sum Per Day |
| | $_____ Total Bid Submitted |

_____

Total Bid Submitted in words

Note: The Contract will be awarded to the lowest responsible and responsive bidder on the basis of the proposed Contract Price to include all items (Price Proposal Form(s)), delivery/installation, storage charges and second shift installation. The Awarding Authority reserves the right to accept or reject any or all bids, if it deems in its sole discretion to be in the public interest to do so.

Signature of Bidder:

_____

Email Address

_____

**Americans with Disabilities Act (42 U.S.C. 12131)**
**Section 504 of the Rehabilitation Act of 1973**
**Tax Compliance/Anti-Collusion Statement**
**Debarment Statement**

The Americans with Disabilities Act (the "Act") applies to all employers of fifteen or more employees. All vendors that are subject to the Act must comply with its provisions. In further compliance with the Act, all Contractors who enter into contracts with the City are prohibited from discrimination against the City's employees, regardless of the size of the Contractor.

The Act protects against discrimination on the basis of "disability", which is defined as a physical or mental impairment that substantially limits at least one "major life activity"; discrimination against a person having a history or record of such impairment; and discrimination against an individual regarded - even if inaccurately - as having such an impairment. The Act also expressly prohibits discrimination that is based on an individual's relationship or association with a disabled person.

The Contractor shall not discriminate against any qualified employee or job applicant with a disability and will make the activities, programs and services covered by any contract awarded through this procurement readily accessible to and usable by individuals with disabilities. To be qualified for a job, or to avail oneself of the Contractor's services, the individual with the disability must meet the essential eligibility requirements for receipt of the Contractor's services or participation in the Contractor's programs or activities with or without: 1) reasonable modifications to the Contractor's rules, policies and practices; 2) removal of architectural, communication, or transportation barriers; or, 3) provisions of auxiliary aids and services.

By submitting its contract, the Contractor certifies to the City of Cambridge that it understands and will comply with all applicable provisions of the Act, including compliance with applicable provisions of Section 504 of the Rehabilitation Act of 1973, if the Contractor is receiving federal funds.

The undersigned certifies under penalties of perjury that this contract has been made and submitted in good faith and without collusion or fraud with any other person. As used in this certification, the "person" shall mean any natural person, business, partnership, corporation, union, committee, club, or other organization, entity, or group of individuals

As required by M.G.L. c. 62C, §49A, the undersigned certifies under the penalties of perjury that the Contractor has complied with all laws of the commonwealth relating to taxes, reporting of employees and contractors, and withholding and remitting child support.

The undersigned certifies that it is not currently subject to any State or Federal debarment order.

_____
(Print Name of person signing bid)

_____
(Signature & Title)

**This form must be submitted with your bid.**

## CORI COMPLIANCE FORM

Persons and businesses supplying goods and/or services to the City of Cambridge ("Vendors"), who are required by law to perform CORI checks, are further required by Section 2.112.060 of the Cambridge Municipal Code to employ fair policies, practices and standards relating to the screening and identification of persons with criminal backgrounds through the CORI system. Such Vendors, when entering into contracts with the City of Cambridge, must affirm that their policies, practices and standards regarding CORI information are consistent with the policies, practices and standards employed by the City of Cambridge as set forth in the City of Cambridge CORI Policy ("CORI Policy") attached hereto.

**CERTIFICATION**

The undersigned certifies under penalties of perjury that the Vendor employs CORI related policies, practices and standards that are consistent with the provisions of the attached CORI Policy. **All Vendors must check one of the three lines below**.

1. _____ CORI checks are not performed on any Applicants.

2. _____ CORI checks are performed on some or all Applicants. The Vendor, by affixing a signature below, affirms under penalties of perjury that its CORI policies, practices and standards are consistent with the policies, practices and standards set forth in the attached CORI Policy.

3. _____ CORI checks are performed on some or all Applicants. The Vendor's CORI policies, practices and standards are not consistent with the attached CORI Policy. Please explain on a separate sheet of paper.

_____ _____

(Typed or printed name of person signing quotation, bid or Proposal) Signature

_____

(Name of Business)

**NOTE:**

**The City Manager, in his sole discretion may grant a waiver to any Vendor on a contract by contract basis.**

**Instructions for Completing CORI Compliance Form:**

**A Vendor should not check Line 1 unless it performs NO CORI checks on ANY applicant. A Vendor who checks Line 2 certifies that the Vendor's CORI policy conforms to the policies, practices and standards set forth in the City's CORI Policy. A Vendor with a CORI policy that does NOT conform to the City's CORI Policy must check Line 3 and explain the reasons for its nonconformance in writing. Vendors, who check Line 3, will not be permitted to enter into contracts with the City, absent a waiver by the City Manager.**

**This form must be submitted with your bid.**

**Name of Bidder:**_____

## Chapter 2.121

## LIVING WAGE ORDINANCE

**Sections:**


| | |
|---|---|
| **2.121.010** | **Title and Purpose** |
| **2.121.020** | **Definitions** |
| **2.121.030** | **Living Wage** |
| **2.121.040** | **Waivers and Exceptions** |
| **2.121.050** | **Notification Requirements** |
| **2.121.060** | **Duties of covered Employers** |
| **2.121.070** | **Community Advisory Board** |
| **2.121.080** | **Enforcement** |
| **2.121.090** | **Severability** |
| **2.121.100** | **Effective Date** |


### 2.121.010 Title and Purpose.

This Chapter shall be known as the "Cambridge Living Wage Ordinance". The purpose of this ordinance is to assure that employees of the City of Cambridge and employees of City contractors, subcontractors and beneficiaries of tax abatements, loans, grants, subsidies and other assistance provided by the City earn an hourly wage that is needed to support a family of four.

### 2.121.020 Definitions.

For the purposes of this ordinance, the term:

**(a) "Applicable Department"** means the Personnel Department for employees of the City of Cambridge, the Purchasing Department, with the advice and assistance of the appropriate department which receives the services, for Covered Employers who contract or subcontract with the City of Cambridge, the School Department for employees, contractors and subcontractors of the School Department, and the City Manager's Office for any other Person who is a Beneficiary of assistance other than a contract or subcontract.

**(b) "Assistance"** means:

(1) any grant, loan, tax incentive, bond financing, subsidy, or other form of assistance valued at least $10,000 that an employer receives by or through the authority or approval of the City of Cambridge, including, but not limited to, c. 121A tax abatements, industrial development bonds, Community Development Block Grant (CDBG) loans and grants, Enterprise Zone designations awarded after the effective date of this Chapter, and the lease of city owned land or buildings below market value; and

(2) any service contract, as defined herein, of at least $10,000 with the City of Cambridge that is made with an employer to provide services pursuant to G.L.c. 30B or other

public procurement laws, awarded, renegotiated or renewed after the effective date of this Chapter.

(3) any service subcontract, as defined herein, of at least $10,000.

**(c) "Beneficiary"** means:

(1) any person who is a recipient of Assistance;

(2) any company or person that is a tenant or sub-tenant, leaseholder or sub-leaseholder of a recipient of Assistance, provided that said company or person employs at least 25 persons and occupies property or uses equipment or property that is improved or developed as a result of Assistance, after the effective date of this Chapter; and

**(d) "Covered Employer"** means the City of Cambridge or a Beneficiary of Assistance.

**(e) "Covered Employee"** means:

(1) a person employed by the City of Cambridge except for persons in those positions listed in Section 2.121.040(j) of this ordinance; and

(2) a person employed by a Covered Employer, or a person employed by an independent contractor doing business with a Covered Employer, who would directly expend any of his or her time on the activities funded by the contract or the activities for which the Beneficiary received the Assistance, except for persons in those positions listed in Section 2.121.040(j) of this ordinance..

**(f) "Living Wage"** has the meaning stated in Section 2.121.030.

**(g) "Person"** means one or more of the following or their agents, employees, servants, representatives, and legal representatives: individuals, corporations, partnerships, joint ventures, associations, labor organizations, educational institutions, mutual companies, joint-stock companies, trusts, unincorporated organizations, trustees, trustees in bankruptcy, receivers, fiduciaries, and all other entities recognized at law by the Commonwealth of Massachusetts.

**(h) "Service Contract"** means a contract let to a contractor by the City of Cambridge for the furnishing of services, to or for the City, except contracts where services are incidental to the delivery of products, equipment or commodities. A contract for the purchase or lease of goods, products, equipment, supplies or other property is not a "service contract" for the purposes of this definition.

**(i) "Service Subcontract"** means a subcontract primarily for the furnishing of services, to or for a recipient of Assistance, except where services are incidental to the delivery of products, equipment or commodities. A contract for the purchase or lease of goods, products, equipment, supplies or other property is not a "service subcontract" for the purposes of this definition.

**2.121.030 Living Wage.**

**(a) Applicability.** Covered Employers shall pay no less than the Living Wage to their employees.

**(b) Amount of wage.** The Living Wage shall be calculated on an hourly basis and shall be no less than $10.00, subject to adjustment as provided herein. The Living Wage shall be upwardly adjusted each year no later than March first in proportion to the increase at the immediately preceding December 31 over the year earlier level of the Annual Average Consumer Price Index for All Urban Consumers (CPI -U) Boston-Lawrence-Salem, MA - NH, as published by the Bureau of Labor Statistics, United States Department of Labor applied to $10.00.

**(c) No reduction in collective bargaining wage rates.** Nothing in this Chapter shall be read to require or authorize any beneficiary to reduce wages set by a collective bargaining agreement.

**(d) Cuts in non-wage benefits prohibited.** No Beneficiary will fund wage increases required by this Chapter, or otherwise respond to the provisions of this Chapter, by reducing the health, insurance, pension, vacation, or other non-wage benefits of any of its employees.

**2.121.040 Waivers and Exceptions.**

**(a) Waivers.** A Covered Employer may request that the City Manager grant a partial or whole waiver to the requirements of this Chapter.

**(b) General Waivers**. Waivers may be granted where application of this Chapter to a particular form of Assistance is found by the City Solicitor to violate a specific state or federal statutory, regulatory or constitutional provision or provisions, and the City Manager approves the waiver on that basis.

**(c) Hardship Waivers for certain not-for-profit employers.** An employer, who has a contract with the City of Cambridge which is not subject to the provisions of G.L. c. 30B, may apply to the City Manager for a specific waiver where payment of the Living Wage by a not-for-profit Covered Employer would cause a substantial hardship to the Covered Employer.

**(d) Chapter 30B contract waivers.** Prior to issuing an invitation for bids for a procurement contract subject to the provisions of G.L. c. 30B, any Applicable Department may apply to the City Manager for a waiver of the application of the Living Wage to the contract where payment of the Living Wage by a Covered Employer would make it inordinately expensive for the City to contract for the services or would result in a significant loss of services, because the contracted work cannot be segregated from the other work of the Covered Employer.

**(e) General Waiver Request Contents.** All General Waiver requests shall include the following:

(1) The nature of the Assistance to which this Chapter applies;

(2) The specific or official name of the Assistance and Assistance program, the statutory or regulatory authority for the granting of the Assistance, and a copy of that authority;

(3) The conflicting statutory, regulatory, or constitutional provision or provisions that makes compliance with this Chapter unlawful, and a copy of each such provision; and

(4) A factual explication and legal analysis of how compliance with this Chapter would violate the cited provision or provisions, and the legal consequences that would attach if the violation were to occur.

**(f) Hardship Waiver Request Contents**. All Hardship Waiver requests shall include the following:

(1) The nature of the Assistance to which this Chapter applies;

(2) A detailed explanation of why payment of the Living Wage would cause a substantial hardship to the Covered Employer; and

(3) A statement of proposed wages below the Living Wage.

**(g) Chapter 30B Contract Waiver Request Contents.** A Chapter 30B contract waiver request shall include the following:

(1) The nature of the Assistance to which this Chapter applies;

(2) A detailed explanation of why the contracted work cannot be segregated from the other work of the bidding Covered Employers thereby making the cost of the contract with the payment of the Living Wage inordinately expensive or would result in a significant loss of services;

**(h) Community Advisory Board review and recommendation regarding waiver requests.** The Community Advisory Board, as described in Section 2.121.070 of this ordinance, shall consider waiver requests along with their supporting documentation and analysis, and may hold a public hearing to consider the views of the public before making a recommendation to the City Manager regarding the waiver request. For a hardship waiver, the Community Advisory Board shall offer an opportunity to be heard to employees of the Covered Employer. After reviewing the recommendation of the Community Advisory Board, the City Manager may approve and grant or deny all or part of a request. The City Manager may in his or her discretion grant a temporary hardship waiver pending the hearing before the Community Advisory Board. For Chapter 30B contract waivers, the Community Advisory Board shall make its recommendation to the City Manager no more than thirty days after it is notified of the request for a Chapter 30B contract waiver.

**(i) Terms of exceptions.** If an employer is subject to this Chapter as a result of its receipt of more than one kind of Assistance covered by this Chapter, and if the City Manager grants a waiver with respect to one form of Assistance, the City Manager need not find that this Chapter is inapplicable to the employer with respect to another form of Assistance received by the employer.

**(j) Exceptions.** The following positions will be excepted from the requirement of the payment of the Living Wage upon certification in an affidavit in a form approved by the Applicable Department and signed by a principal officer of the Covered Employer that the positions are as follows:

(1) youth hired pursuant to a city, state, or federally funded program which employs youth as defined by city, state, or federal guidelines, during the summer, or as part of a school to work program, or in other related seasonal or part-time program;

(2) work-study or cooperative educational programs;

(3) trainees who are given a stipend or wage as part of a job training program that provides the trainees with additional services, which may include, but are not limited to, room and board, case management, or job readiness services.

(4) persons working in a recognized supported employment program that provides workers with additional services, which may include, but are not limited to, room and board, case management, counseling, or job coaching:

(5) positions where housing is provided by the employer;

(6) employees who are exempt from federal or state minimum wage requirements; and

(7) individuals employed by the City of Cambridge where the employment of such individuals is intended primarily to provide a benefit or subsidy to such individuals, although the City is compensating them for work performed.

**2.121.050 Notification Requirements**.

All Applicable Departments shall provide in writing an explanation of the requirements of this ordinance in all requests for bids for service contracts and to all persons applying for Assistance as defined by this ordinance. All persons who have signed a service contract with the City of Cambridge or a contract for Assistance shall forward a copy of such requirements to any person submitting a bid for a subcontract on the Assistance contract.

**2.121.060 Duties of Covered Employers.**

**(a) Notification Requirements.** Covered employers shall provide each Covered employee with a fact sheet about this ordinance and shall post a notice about the ordinance in a conspicuous location visible to all employees. The fact sheet and poster shall be provided to the Covered Employer by the Applicable Department and shall include:

(1) notice of the Living Wage amount;

(2) a summary of the provisions of this ordinance;

(3) a description of the enforcement provisions of the ordinance;

(4) the name, address, and phone number of a person designated by the Applicable Department to whom complaints of noncompliance with this ordinance should be directed.

**(b) Contract for Assistance.** At the time of signing a contract for assistance with the City of Cambridge or with a Beneficiary, the contract must include the following:

(1) the name of the program or project under which the contract or subcontract is being awarded;

(2) a local contact name, address, and phone number for the Beneficiary;

(3) a written commitment by the Beneficiary to pay all Covered Employees not less than the Living Wage as subject to adjustment under this ordinance and to comply with the provisions of this ordinance;

(4) a list of Covered Employees under the contract with the employees' job titles;

(5) a list of all subcontracts either awarded or that will be awarded to Beneficiaries with funds from the Assistance. Upon signing any subcontracts, the Covered Employer shall forward a copy of the subcontract to the Applicable Department.

**(c) Maintenance of payroll records.** Each Covered Employer shall maintain payrolls for all Covered Employees and basic records relating thereto and shall preserve them for a period of three years. The records shall contain the name and address of each employee, the job title and classification, the number of hours worked each day, the gross wages, deductions made, actual wages paid, and copies of social security wage and withholding reports, and evidence of payment thereof and such other data as may be required by the Applicable Department from time to time.

**(d) Applicable Department duties.** The Applicable Department shall cause investigations to be made as may be necessary to determine whether there has been compliance with this Ordinance. The Applicable Department shall report the findings of all such investigations to the Community Advisory Board.

**(e) Covered Employer to cooperate.** The Covered Employer shall submit payroll records on request to the Applicable Department. The Covered Employer shall permit City representatives to observe work being performed upon the work site, to interview employees and to examine the books and records relating to the payrolls being investigated to determine payment of wages.

**(f) City Assistance Reports.** Each Applicable Department shall file a City Assistance Report with the City Manager and the Community Advisory Board by July 31 of each year The report shall include, for each Assistance package or contract approved during the preceding fiscal year:

(1) the name of the Applicable Department (awarding agency), the name of the specific program under which the Assistance was awarded, and the origin of funds for Assistance;

(2) a description of the purpose or project for which the Assistance was awarded;

(3) the name, address, and phone number of a local contact person for the Covered Employer;

(4) the total cost to the City of Assistance provided to each Beneficiary, including both face-value of Assistance, as well as revenue not collected as a result of the Assistance.

**2.121.070 Community Advisory Board.**

**(a) Purpose.** The purpose of the Community Advisory Board shall be to review the effectiveness of this Ordinance at creating and retaining Living Wage jobs, to make recommendations to the City Manager regarding the granting of Waivers to Covered Employers, to review the implementation and enforcement of this ordinance, and to make recommendations from time to time in connection therewith.

**(b) Composition.** The Community Advisory Board shall be composed of nine members and shall include representatives of labor unions, community organizations and the business community. All members will be appointed by the City Manager. Members of the Board shall serve a three-year term. Whenever a vacancy shall occur the City Manager shall appoint a replacement within thirty days of said vacancy.

**(c) Meetings.** The Community Advisory Board shall meet quarterly and in special session as required. All meetings of the Board shall be open to the public and will allow for public testimony on the uses of the City Assistance generally, and on specific instances of Assistance or proposed Assistance as received or sought by individual enterprises.

**(d) Conflict of Interest.** No member of the Community Advisory Board shall participate in any proceeding concerning a Beneficiary, a Covered Employer or a Covered Employee, or applicant for waiver or exemption, if the member or any member of his or her immediate family has a direct or indirect financial interest in the outcome of said proceeding.

**2.121.080 Enforcement.**

**( a) Enforcement powers.** In order to enforce this Chapter, the Applicable Department may, with the approval and assistance of the City Solicitor, issue subpoenas, compel the attendance and testimony of witnesses and production of books, papers, records, and documents relating to payroll records necessary for hearing, investigations, and proceedings. In case of failure to comply with a subpoena, the City may apply to a court of appropriate jurisdiction for an order requiring the attendance and testimony of witnesses and the productions of books, papers, records, and documents. Said court, in the case of a refusal to comply with any such subpoena, after notice to the person subpoenaed, and upon finding that the attendance or testimony of such witnesses or the production of such books, papers, records, and documents, as the case may be, is relevant or necessary for such hearings, investigation, or proceedings, may issue an order requiring the attendance or testimony of such witnesses or the production of such documents and any violation of the court's order may be punishable by the court as contempt thereof.

**(b) Complaint procedures.** An employee who believes that he or she is a Covered Employee or an applicant for a position to be filled by a Covered Employee who believes that his or her employer is not complying with requirements of this Chapter applicable to the employer may file a complaint with the Applicable Department or with the Community Advisory Board. Complaints of alleged violations may also be filed by concerned citizens or by the City Council. Complaints of alleged violations may be made at any time, but in no event more than three years after the last date of alleged violation, and shall be investigated promptly by the Applicable Department. Statements written or oral, made by an employee, shall be treated as confidential and shall not be disclosed to the Covered Employer without the consent of the employee.

**(c) Investigations and hearings.** The Applicable Department shall investigate the complaint, and may, in conjunction with the City Solicitor, and in accordance with the powers herein granted, require the production by the employer of such evidence as required to determine compliance. Prior to ordering any penalty the applicable Department shall give notice to the employer and conduct a hearing. If at any time during these proceedings, the employer voluntarily makes restitution of the wages not paid to the employee making the complaint and to any similarly situated employees, by paying all back wages owed plus interest at the average prior year Massachusetts passbook savings bank rate, or otherwise remedies the violation alleged if the violation involves matters other than wages, then the Applicable Department shall thereafter dismiss the complaint against the employer.

**(d) Remedies.** In the event that the Applicable Department, after notice and hearing, determines that any Covered Employer has failed to pay the Living Wage rate or has otherwise violated the provisions of this Chapter, the Applicable Department may order any or all of the following penalties and relief:

(1) Fines up to the amount of $300 for each Covered Employee for each day that the Covered Employer is in violation of this Ordinance, except if the violation was not knowing and willful, then the total fine shall not exceed the amount of back wages plus interest owed;

(2) Suspension of ongoing contract and subcontract payments;

(3) Ineligibility for future City Assistance for up to three years beginning when all penalties and restitution have been paid in full. In addition, all Covered Employers having any principal officers who were principal officers of a barred beneficiary shall be ineligible under this section; and

(4) Any other action deemed appropriate and within the discretion and authority of the city.

Remedies in this section shall also apply to the party or parties aiding and abetting in any violation of this chapter.

**(e) Private right of action.** Any Covered Employee, or any person who was formerly employed by a Beneficiary, may bring an action to enforce the provisions of this Chapter to recover back pay and benefits, attorneys fees and costs, by filing suit against a Beneficiary in any court of competent jurisdiction.

**(f) Remedies herein non-exclusive**. No remedy set forth in this Chapter is intended to be exclusive or a prerequisite for asserting a claim for relief to enforce the right granted under this Chapter in a court of law. This Chapter shall not be construed to limit an employee's right to bring a common law cause of action for wrongful termination.

**(g) Retaliation and discrimination barred.** A Covered Employer shall not discharge, reduce the compensation or otherwise retaliate against any employee for making a complaint to the City, otherwise asserting his or her rights under this Chapter, participating in any of its proceedings or using any civil remedies to enforce his or her rights under the Chapter. The City shall investigate allegations of retaliation or discrimination and shall, if found to be true, after notice and a hearing, order appropriate relief as set out in paragraphs (c) and (d) herein

**2.121.090 Severability.**

In the event any provision of this ordinance shall be held invalid or unenforceable by any court of competent jurisdiction, such holding shall not invalidate or render unenforceable any other provisions hereof.

**2.121.100 Effective Date.**

This law shall be effective sixty (60) after final passage.

The Living Wage Ordinance (2.121) provides, at 1.121.030(b) that the wage shall be upwardly adjusted each year no later than March 1st in proportion to the increase in the Annual Average Consumer Price Index for the prior calendar year for All Urban Consumers (CPI-U) in the Boston area, as published by the federal Bureau of Labor Statistics.

For calendar year 1999, the CPI-U increased by 2.5%. Therefore the new living wage, as of March 1, 2000 is $10.25.

For calendar year 2000, the CPI-U increased by 4.3%. Therefore the new living wage, as of March 1, 2001 is $ 10.68.

For calendar year 2001, the CPI-U increased by 4.3%. Therefore the new living wage, as of March 1, 2002 is $11.11.

For calendar year 2002, the CPI-U increased by 2.6% . Therefore the new living wage, as of March 1, 2003 is $11.37.

The City Council has voted to amend the section of the Living Wage Ordinance (1.121.030 (b) that provides the method for calculating cost of living increases each year. As a result of this change, the living wage as of March 30, 2003 is $11.44.

For calendar year 2003, the CPI-U increased by 3.76%. Therefore the new living wage, as of March 1, 2004 is $11.87.

For calendar year 2004, the CPI-U increased by 2.7%. Therefore the new living wage, as of March 1, 2005 is $12.19.

For calendar year 2005, the CPI-U increased by 3.3%. Therefore the new living wage, as of March 1, 2006 is $12.59.

For calendar year 2006 the CPI-U increased by 3.1 %. Therefore the new living wage, as of March 1, 2007 is $12.98.

For calendar year 2007 the CPI-U increased by 1.9 %. Therefore the new living wage, as of March 1, 2008 is $13.23.

For calendar year 2008 the CPI-U increased by 3.5 %. Therefore the new living wage, as of March 1, 2009 is $13.69.

For calendar year 2009 the CPI-U decreased by .67 %. Therefore the new living wage, as of March 1, 2010 will remain at $13.69.

For calendar year 2010 the CPI-U increased by 1.57%. Therefore the new living wage, as of March 1, 2011 is $13.90.
For calendar year 2011 the CPI-U increased by 2.71%. Therefore the new living wage, as of March 1, 2012 is $14.28.

For calendar year 2012 the CPI-U increased by 1.58%. Therefore the new living wage, as of March 1, 2013 is $14.51.

For calendar year 2013 the CPI-U increased by 1.37%.Therefore the new living wage, as of March 1, 2014 is $14.71.

For calendar year 2014 the CPI-U increased by 1.61% Therefore the new living wage, as of March 1, 2015 is $14.95.

# THE COMMONWEALTH OF MASSACHUSETTS
# EXECUTIVE OFFICE OF LABOR AND WORKFORCE DEVELOPMENT
# DEPARTMENT OF LABOR STANDARDS

## Prevailing Wage Rates

**As determined by the Director under the provisions of the Massachusetts General Laws, Chapter 149, Sections 26 to 27H**

CHARLES D. BAKER
Governor

KARYN E. POLITO
Lt. Governor

RONALD L. WALKER, II
Secretary

WILLIAM D MCKINNEY
Director

**Awarding Authority:** City of Cambridge

**Contract Number:** 6882 **City/Town:** CAMBRIDGE

**Description of Work:** Install Custom Planters/benches for the Martin Luther King Jr. School. Installation may require drilling and fastening to the building/ground.

**Job Location:** 100 Putnam Ave

---

Information about Prevailing Wage Schedules for Awarding Authorities and Contractors

- This wage schedule applies only to the specific project referenced at the top of this page and uniquely identified by the "Wage Request Number" on all pages of this schedule.
- An Awarding Authority must request an updated wage schedule from the Department of Labor Standards ("DLS") if it has not opened bids or selected a contractor within 90 days of the date of issuance of the wage schedule. For CM AT RISK projects (bid pursuant to G.L. c.149A), the earlier of: (a) the execution date of the GMP Amendment, or (b) the bid for the first construction scope of work must be within 90-days of the wage schedule issuance date.
- The wage schedule shall be incorporated in any advertisement or call for bids for the project as required by M.G.L. c. 149, § 27. The wage schedule shall be made a part of the contract awarded for the project. The wage schedule must be posted in a conspicuous place at the work site for the life of the project in accordance with M.G.L. c. 149 § 27. The wages listed on the wage schedule must be paid to employees performing construction work on the project whether they are employed by the prime contractor, a filed sub-bidder, or any sub-contractor.
- All apprentices working on the project are required to be registered with the Massachusetts Division of Apprentice Standards (DAS). Apprentice must keep his/her apprentice identification card on his/her person during all work hours on the project. An apprentice registered with DAS may be paid the lower apprentice wage rate at the applicable step as provided on the prevailing wage schedule. **If an apprentice rate is not listed on the prevailing wage schedule for the trade in which an apprentice is registered with the DAS, the apprentice must be paid the journeyworker's rate for the trade.**
- The wage rates will remain in effect for the duration of the project, except in the case of multi-year public construction projects. For construction projects lasting longer than one year, awarding authorities must request an updated wage schedule. Awarding authorities are required to request these updates no later than two weeks before the anniversary of the date the contract was executed by the awarding authority and the general contractor. For multi-year CM AT RISK projects, awarding authority must request an annual update no later than two weeks before the anniversary date, determined as the earlier of: (a) the execution date of the GMP Amendment, or (b) the execution date of the first amendment to permit procurement of construction services. Contractors are required to obtain the wage schedules from awarding authorities, and to pay no less than these rates to covered workers. The annual update requirement is not applicable to 27F "rental of equipment" contracts.
- Every contractor or subcontractor which performs construction work on the project is required to submit weekly payroll reports and a Statement of Compliance directly to the awarding authority by mail or email and keep them on file for three years. Each weekly payroll report must contain: the employee's name, address, occupational classification, hours worked, and wages paid. Do not submit weekly payroll reports to DLS. A sample of a payroll reporting form may be obtained at http://www.mass.gov/dols/pw.
- Contractors with questions about the wage rates or classifications included on the wage schedule have an affirmative obligation to inquire with DLS at (617) 626-6953.
- Employees not receiving the prevailing wage rate set forth on the wage schedule may report the violation to the Fair Labor Division of the office of the Attorney General at (617) 727-3465.
- Failure of a contractor or subcontractor to pay the prevailing wage rates listed on the wage schedule to all employees who perform construction work on the project is a violation of the law and subjects the contractor or subcontractor to civil and criminal penalties.

---

**Issue Date:** 06/30/2015 **Wage Request Number:** 20150630-058

| Classification | Effective Date | Base Wage | Health | Pension | Supplemental Unemployment | Total Rate |
|---|---|---|---|---|---|---|
| **Construction** | | | | | | |
| (2 AXLE) DRIVER - EQUIPMENT<br>*TEAMSTERS JOINT COUNCIL NO. 10 ZONE A* | 06/01/2015 | $32.75 | $9.91 | $9.33 | $0.00 | $51.99 |
| | 08/01/2015 | $32.75 | $10.41 | $9.33 | $0.00 | $52.49 |
| | 12/01/2015 | $32.75 | $10.41 | $10.08 | $0.00 | $53.24 |
| | 06/01/2016 | $33.25 | $10.41 | $10.08 | $0.00 | $53.74 |
| | 08/01/2016 | $33.25 | $10.91 | $10.08 | $0.00 | $54.24 |
| | 12/01/2016 | $33.25 | $10.91 | $10.89 | $0.00 | $55.05 |
| (3 AXLE) DRIVER - EQUIPMENT<br>*TEAMSTERS JOINT COUNCIL NO. 10 ZONE A* | 06/01/2015 | $32.82 | $9.91 | $9.33 | $0.00 | $52.06 |
| | 08/01/2015 | $32.82 | $10.41 | $9.33 | $0.00 | $52.56 |
| | 12/01/2015 | $32.82 | $10.41 | $10.08 | $0.00 | $53.31 |
| | 06/01/2016 | $33.32 | $10.41 | $10.08 | $0.00 | $53.81 |
| | 08/01/2016 | $33.32 | $10.91 | $10.08 | $0.00 | $54.31 |
| | 12/01/2016 | $33.32 | $10.91 | $10.89 | $0.00 | $55.12 |
| (4 & 5 AXLE) DRIVER - EQUIPMENT<br>*TEAMSTERS JOINT COUNCIL NO. 10 ZONE A* | 06/01/2015 | $32.94 | $9.91 | $9.33 | $0.00 | $52.18 |
| | 08/01/2015 | $32.94 | $10.41 | $9.33 | $0.00 | $52.68 |
| | 12/01/2015 | $32.94 | $10.41 | $10.08 | $0.00 | $53.43 |
| | 06/01/2016 | $33.44 | $10.41 | $10.08 | $0.00 | $53.93 |
| | 08/01/2016 | $33.44 | $10.91 | $10.08 | $0.00 | $54.43 |
| | 12/01/2016 | $33.44 | $10.91 | $10.89 | $0.00 | $55.24 |
| ADS/SUBMERSIBLE PILOT<br>*PILE DRIVER LOCAL 56 (ZONE 1)* | 08/01/2014 | $87.36 | $9.80 | $18.17 | $0.00 | $115.33 |
| | 08/01/2015 | $90.51 | $9.80 | $18.17 | $0.00 | $118.48 |
| AIR TRACK OPERATOR<br>*LABORERS - ZONE 1* | 06/01/2015 | $35.85 | $7.30 | $13.20 | $0.00 | $56.35 |
| | 12/01/2015 | $36.60 | $7.30 | $13.20 | $0.00 | $57.10 |
| | 06/01/2016 | $37.35 | $7.30 | $13.20 | $0.00 | $57.85 |
| | 12/01/2016 | $38.35 | $7.30 | $13.20 | $0.00 | $58.85 |
| For apprentice rates see "Apprentice- LABORER" | | | | | | |
| ASBESTOS REMOVER - PIPE / MECH. EQUIPT.<br>*HEAT & FROST INSULATORS LOCAL 6 (BOSTON)* | 06/01/2015 | $33.43 | $10.40 | $5.95 | $0.00 | $49.78 |
| | 12/01/2015 | $34.38 | $10.40 | $5.95 | $0.00 | $50.73 |
| ASPHALT RAKER<br>*LABORERS - ZONE 1* | 06/01/2015 | $35.35 | $7.30 | $13.20 | $0.00 | $55.85 |
| | 12/01/2015 | $36.10 | $7.30 | $13.20 | $0.00 | $56.60 |
| | 06/01/2016 | $36.85 | $7.30 | $13.20 | $0.00 | $57.35 |
| | 12/01/2016 | $37.85 | $7.30 | $13.20 | $0.00 | $58.35 |
| For apprentice rates see "Apprentice- LABORER" | | | | | | |
| ASPHALT/CONCRETE/CRUSHER PLANT-ON SITE<br>*OPERATING ENGINEERS LOCAL 4* | 06/01/2015 | $42.83 | $10.00 | $14.55 | $0.00 | $67.38 |
| | 12/01/2015 | $44.08 | $10.00 | $14.55 | $0.00 | $68.63 |
| | 06/01/2016 | $44.83 | $10.00 | $14.55 | $0.00 | $69.38 |
| | 12/01/2016 | $46.08 | $10.00 | $14.55 | $0.00 | $70.63 |
| | 06/01/2017 | $47.08 | $10.00 | $14.55 | $0.00 | $71.63 |
| | 12/01/2017 | $48.08 | $10.00 | $14.55 | $0.00 | $72.63 |
| For apprentice rates see "Apprentice- OPERATING ENGINEERS" | | | | | | |
| BACKHOE/FRONT-END LOADER<br>*OPERATING ENGINEERS LOCAL 4* | 06/01/2015 | $42.83 | $10.00 | $14.55 | $0.00 | $67.38 |
| | 12/01/2015 | $44.08 | $10.00 | $14.55 | $0.00 | $68.63 |
| | 06/01/2016 | $44.83 | $10.00 | $14.55 | $0.00 | $69.38 |
| | 12/01/2016 | $46.08 | $10.00 | $14.55 | $0.00 | $70.63 |
| | 06/01/2017 | $47.08 | $10.00 | $14.55 | $0.00 | $71.63 |
| | 12/01/2017 | $48.08 | $10.00 | $14.55 | $0.00 | $72.63 |

| Classification | Effective Date | Base Wage | Health | Pension | Supplemental Unemployment | Total Rate |
|---|---|---|---|---|---|---|
| For apprentice rates see "Apprentice- OPERATING ENGINEERS" | | | | | | |
| BARCO-TYPE JUMPING TAMPER<br>*LABORERS - ZONE 1* | 06/01/2015 | $35.35 | $7.30 | $13.20 | $0.00 | $55.85 |
| | 12/01/2015 | $36.10 | $7.30 | $13.20 | $0.00 | $56.60 |
| | 06/01/2016 | $36.85 | $7.30 | $13.20 | $0.00 | $57.35 |
| | 12/01/2016 | $37.85 | $7.30 | $13.20 | $0.00 | $58.35 |
| For apprentice rates see "Apprentice- LABORER" | | | | | | |
| BLOCK PAVER, RAMMER / CURB SETTER<br>*LABORERS - ZONE 1* | 06/01/2015 | $35.85 | $7.30 | $13.20 | $0.00 | $56.35 |
| | 12/01/2015 | $36.60 | $7.30 | $13.20 | $0.00 | $57.10 |
| | 06/01/2016 | $37.35 | $7.30 | $13.20 | $0.00 | $57.85 |
| | 12/01/2016 | $38.35 | $7.30 | $13.20 | $0.00 | $58.85 |
| For apprentice rates see "Apprentice- LABORER" | | | | | | |
| BOILER MAKER<br>*BOILERMAKERS LOCAL 29* | 01/01/2010 | $37.70 | $6.97 | $11.18 | $0.00 | $55.85 |

**Apprentice -** *BOILERMAKER - Local 29*

**Effective Date -** 01/01/2010

| Step | percent | Apprentice Base Wage | Health | Pension | Supplemental Unemployment | Total Rate |
|---|---|---|---|---|---|---|
| 1 | 65 | $24.51 | $6.97 | $11.18 | $0.00 | $42.66 |
| 2 | 65 | $24.51 | $6.97 | $11.18 | $0.00 | $42.66 |
| 3 | 70 | $26.39 | $6.97 | $11.18 | $0.00 | $44.54 |
| 4 | 75 | $28.28 | $6.97 | $11.18 | $0.00 | $46.43 |
| 5 | 80 | $30.16 | $6.97 | $11.18 | $0.00 | $48.31 |
| 6 | 85 | $32.05 | $6.97 | $11.18 | $0.00 | $50.20 |
| 7 | 90 | $33.93 | $6.97 | $11.18 | $0.00 | $52.08 |
| 8 | 95 | $35.82 | $6.97 | $11.18 | $0.00 | $53.97 |

**Notes:**

**Apprentice to Journeyworker Ratio:1:5**

| | | | | | | |
|---|---|---|---|---|---|---|
| BRICK/STONE/ARTIFICIAL MASONRY (INCL. MASONRY WATERPROOFING)<br>*BRICKLAYERS LOCAL 3 (BOSTON)* | 02/01/2015 | $48.96 | $10.18 | $18.50 | $0.00 | $77.64 |
| | 08/01/2015 | $49.86 | $10.18 | $18.57 | $0.00 | $78.61 |
| | 02/01/2016 | $50.43 | $10.18 | $18.57 | $0.00 | $79.18 |
| | 08/01/2016 | $51.33 | $10.18 | $18.65 | $0.00 | $80.16 |
| | 02/01/2017 | $51.90 | $10.18 | $18.65 | $0.00 | $80.73 |

| Classification | Effective Date | Base Wage | Health | Pension | Supplemental Unemployment | Total Rate |
|---|---|---|---|---|---|---|

**Apprentice -** *BRICK/PLASTER/CEMENT MASON - Local 3 Boston*

**Effective Date -** 02/01/2015

| Step | percent | Apprentice Base Wage | Health | Pension | Supplemental Unemployment | Total Rate |
|---|---|---|---|---|---|---|
| 1 | 50 | $24.48 | $10.18 | $18.50 | $0.00 | $53.16 |
| 2 | 60 | $29.38 | $10.18 | $18.50 | $0.00 | $58.06 |
| 3 | 70 | $34.27 | $10.18 | $18.50 | $0.00 | $62.95 |
| 4 | 80 | $39.17 | $10.18 | $18.50 | $0.00 | $67.85 |
| 5 | 90 | $44.06 | $10.18 | $18.50 | $0.00 | $72.74 |

**Effective Date -** 08/01/2015

| Step | percent | Apprentice Base Wage | Health | Pension | Supplemental Unemployment | Total Rate |
|---|---|---|---|---|---|---|
| 1 | 50 | $24.93 | $10.18 | $18.57 | $0.00 | $53.68 |
| 2 | 60 | $29.92 | $10.18 | $18.57 | $0.00 | $58.67 |
| 3 | 70 | $34.90 | $10.18 | $18.57 | $0.00 | $63.65 |
| 4 | 80 | $39.89 | $10.18 | $18.57 | $0.00 | $68.64 |
| 5 | 90 | $44.87 | $10.18 | $18.57 | $0.00 | $73.62 |

**Notes:**

**Apprentice to Journeyworker Ratio:1:5**

| | | | | | | |
|---|---|---|---|---|---|---|
| BULLDOZER/GRADER/SCRAPER<br>*OPERATING ENGINEERS LOCAL 4* | 06/01/2015 | $42.42 | $10.00 | $14.55 | $0.00 | $66.97 |
| | 12/01/2015 | $43.66 | $10.00 | $14.55 | $0.00 | $68.21 |
| | 06/01/2016 | $44.41 | $10.00 | $14.55 | $0.00 | $68.96 |
| | 12/01/2016 | $45.64 | $10.00 | $14.55 | $0.00 | $70.19 |
| | 06/01/2017 | $46.63 | $10.00 | $14.55 | $0.00 | $71.18 |
| | 12/01/2017 | $47.62 | $10.00 | $14.55 | $0.00 | $72.17 |
| For apprentice rates see "Apprentice- OPERATING ENGINEERS" | | | | | | |
| CAISSON & UNDERPINNING BOTTOM MAN<br>*LABORERS - FOUNDATION AND MARINE* | 06/01/2015 | $36.20 | $7.30 | $13.40 | $0.00 | $56.90 |
| | 12/01/2015 | $36.95 | $7.30 | $13.40 | $0.00 | $57.65 |
| | 06/01/2016 | $37.70 | $7.30 | $13.40 | $0.00 | $58.40 |
| | 12/01/2016 | $38.70 | $7.30 | $13.40 | $0.00 | $59.40 |
| For apprentice rates see "Apprentice- LABORER" | | | | | | |
| CAISSON & UNDERPINNING LABORER<br>*LABORERS - FOUNDATION AND MARINE* | 06/01/2015 | $35.05 | $7.30 | $13.40 | $0.00 | $55.75 |
| | 12/01/2015 | $35.80 | $7.30 | $13.40 | $0.00 | $56.50 |
| | 06/01/2016 | $36.55 | $7.30 | $13.40 | $0.00 | $57.25 |
| | 12/01/2016 | $37.55 | $7.30 | $13.40 | $0.00 | $58.25 |
| For apprentice rates see "Apprentice- LABORER" | | | | | | |
| CAISSON & UNDERPINNING TOP MAN<br>*LABORERS - FOUNDATION AND MARINE* | 06/01/2015 | $35.05 | $7.30 | $13.40 | $0.00 | $55.75 |
| | 12/01/2015 | $35.80 | $7.30 | $13.40 | $0.00 | $56.50 |
| | 06/01/2016 | $36.55 | $7.30 | $13.40 | $0.00 | $57.25 |
| | 12/01/2016 | $37.55 | $7.30 | $13.40 | $0.00 | $58.25 |
| For apprentice rates see "Apprentice- LABORER" | | | | | | |

| Classification | Effective Date | Base Wage | Health | Pension | Supplemental Unemployment | Total Rate |
|---|---|---|---|---|---|---|
| CARBIDE CORE DRILL OPERATOR<br>*LABORERS - ZONE 1* | 06/01/2015 | $35.35 | $7.30 | $13.20 | $0.00 | $55.85 |
| | 12/01/2015 | $36.10 | $7.30 | $13.20 | $0.00 | $56.60 |
| | 06/01/2016 | $36.85 | $7.30 | $13.20 | $0.00 | $57.35 |
| | 12/01/2016 | $37.85 | $7.30 | $13.20 | $0.00 | $58.35 |
| For apprentice rates see "Apprentice- LABORER" | | | | | | |
| CARPENTER<br>*CARPENTERS -ZONE 1 (Metro Boston)* | 03/01/2015 | $42.30 | $9.80 | $16.48 | $0.00 | $68.58 |

**Apprentice -** *CARPENTER - Zone 1 Metro Boston*

**Effective Date -** 03/01/2015

| Step | percent | Apprentice Base Wage | Health | Pension | Supplemental Unemployment | Total Rate |
|---|---|---|---|---|---|---|
| 1 | 50 | $21.15 | $9.80 | $1.63 | $0.00 | $32.58 |
| 2 | 60 | $25.38 | $9.80 | $1.63 | $0.00 | $36.81 |
| 3 | 70 | $29.61 | $9.80 | $11.59 | $0.00 | $51.00 |
| 4 | 75 | $31.73 | $9.80 | $11.59 | $0.00 | $53.12 |
| 5 | 80 | $33.84 | $9.80 | $13.22 | $0.00 | $56.86 |
| 6 | 80 | $33.84 | $9.80 | $13.22 | $0.00 | $56.86 |
| 7 | 90 | $38.07 | $9.80 | $14.85 | $0.00 | $62.72 |
| 8 | 90 | $38.07 | $9.80 | $14.85 | $0.00 | $62.72 |

**Notes:**

**Apprentice to Journeyworker Ratio:1:5**

| | | | | | | |
|---|---|---|---|---|---|---|
| CEMENT MASONRY/PLASTERING<br>*BRICKLAYERS LOCAL 3 (BOSTON)* | 01/01/2015 | $44.90 | $10.90 | $18.71 | $1.30 | $75.81 |
| | 07/01/2015 | $45.82 | $10.90 | $18.71 | $1.30 | $76.73 |
| | 01/01/2016 | $46.44 | $10.90 | $18.71 | $1.30 | $77.35 |

| Classification | Effective Date | Base Wage | Health | Pension | Supplemental Unemployment | Total Rate |
|---|---|---|---|---|---|---|

**Apprentice -** *CEMENT MASONRY/PLASTERING - Eastern Mass (Boston)*

**Effective Date -** 01/01/2015

| Step | percent | Apprentice Base Wage | Health | Pension | Supplemental Unemployment | Total Rate |
|---|---|---|---|---|---|---|
| 1 | 50 | $22.45 | $10.90 | $12.21 | $0.00 | $45.56 |
| 2 | 60 | $26.94 | $10.90 | $13.71 | $1.30 | $52.85 |
| 3 | 65 | $29.19 | $10.90 | $14.71 | $1.30 | $56.10 |
| 4 | 70 | $31.43 | $10.90 | $15.71 | $1.30 | $59.34 |
| 5 | 75 | $33.68 | $10.90 | $16.71 | $1.30 | $62.59 |
| 6 | 80 | $35.92 | $10.90 | $17.71 | $1.30 | $65.83 |
| 7 | 90 | $40.41 | $10.90 | $18.71 | $1.30 | $71.32 |

**Effective Date -** 07/01/2015

| Step | percent | Apprentice Base Wage | Health | Pension | Supplemental Unemployment | Total Rate |
|---|---|---|---|---|---|---|
| 1 | 50 | $22.91 | $10.90 | $12.21 | $0.00 | $46.02 |
| 2 | 60 | $27.49 | $10.90 | $13.71 | $1.30 | $53.40 |
| 3 | 65 | $29.78 | $10.90 | $14.71 | $1.30 | $56.69 |
| 4 | 70 | $32.07 | $10.90 | $15.71 | $1.30 | $59.98 |
| 5 | 75 | $34.37 | $10.90 | $16.71 | $1.30 | $63.28 |
| 6 | 80 | $36.66 | $10.90 | $17.71 | $1.30 | $66.57 |
| 7 | 90 | $41.24 | $10.90 | $18.71 | $1.30 | $72.15 |

**Notes:**

Steps 3,4 are 500 hrs. All other steps are 1,000 hrs.

**Apprentice to Journeyworker Ratio:1:3**

| | | | | | | |
|---|---|---|---|---|---|---|
| CHAIN SAW OPERATOR<br>*LABORERS - ZONE 1* | 06/01/2015 | $35.35 | $7.30 | $13.20 | $0.00 | $55.85 |
| | 12/01/2015 | $36.10 | $7.30 | $13.20 | $0.00 | $56.60 |
| | 06/01/2016 | $36.85 | $7.30 | $13.20 | $0.00 | $57.35 |
| | 12/01/2016 | $37.85 | $7.30 | $13.20 | $0.00 | $58.35 |
| For apprentice rates see "Apprentice- LABORER" | | | | | | |
| CLAM SHELLS/SLURRY BUCKETS/HEADING MACHINES<br>*OPERATING ENGINEERS LOCAL 4* | 06/01/2015 | $43.83 | $10.00 | $14.55 | $0.00 | $68.38 |
| | 12/01/2015 | $45.08 | $10.00 | $14.55 | $0.00 | $69.63 |
| | 06/01/2016 | $45.83 | $10.00 | $14.55 | $0.00 | $70.38 |
| | 12/01/2016 | $47.08 | $10.00 | $14.55 | $0.00 | $71.63 |
| | 06/01/2017 | $48.08 | $10.00 | $14.55 | $0.00 | $72.63 |
| | 12/01/2017 | $49.08 | $10.00 | $14.55 | $0.00 | $73.63 |
| For apprentice rates see "Apprentice- OPERATING ENGINEERS" | | | | | | |
| COMPRESSOR OPERATOR<br>*OPERATING ENGINEERS LOCAL 4* | 06/01/2015 | $29.61 | $10.00 | $14.55 | $0.00 | $54.16 |
| | 12/01/2015 | $30.48 | $10.00 | $14.55 | $0.00 | $55.03 |
| | 06/01/2016 | $31.00 | $10.00 | $14.55 | $0.00 | $55.55 |
| | 12/01/2016 | $31.87 | $10.00 | $14.55 | $0.00 | $56.42 |
| | 06/01/2017 | $32.56 | $10.00 | $14.55 | $0.00 | $57.11 |
| | 12/01/2017 | $33.25 | $10.00 | $14.55 | $0.00 | $57.80 |
| For apprentice rates see "Apprentice- OPERATING ENGINEERS" | | | | | | |

| Classification | Effective Date | Base Wage | Health | Pension | Supplemental Unemployment | Total Rate |
|---|---|---|---|---|---|---|
| DELEADER (BRIDGE)<br>*PAINTERS LOCAL 35 - ZONE 1* | 01/01/2015 | $47.66 | $7.85 | $16.10 | $0.00 | $71.61 |
| | 07/01/2015 | $48.56 | $7.85 | $16.10 | $0.00 | $72.51 |
| | 01/01/2016 | $49.51 | $7.85 | $16.10 | $0.00 | $73.46 |
| | 07/01/2016 | $50.46 | $7.85 | $16.10 | $0.00 | $74.41 |
| | 01/01/2017 | $51.41 | $7.85 | $16.10 | $0.00 | $75.36 |

**Apprentice -** *PAINTER Local 35 - BRIDGES/TANKS*

**Effective Date -** 01/01/2015

| Step | percent | Apprentice Base Wage | Health | Pension | Supplemental Unemployment | Total Rate |
|---|---|---|---|---|---|---|
| 1 | 50 | $23.83 | $7.85 | $0.00 | $0.00 | $31.68 |
| 2 | 55 | $26.21 | $7.85 | $3.66 | $0.00 | $37.72 |
| 3 | 60 | $28.60 | $7.85 | $3.99 | $0.00 | $40.44 |
| 4 | 65 | $30.98 | $7.85 | $4.32 | $0.00 | $43.15 |
| 5 | 70 | $33.36 | $7.85 | $14.11 | $0.00 | $55.32 |
| 6 | 75 | $35.75 | $7.85 | $14.44 | $0.00 | $58.04 |
| 7 | 80 | $38.13 | $7.85 | $14.77 | $0.00 | $60.75 |
| 8 | 90 | $42.89 | $7.85 | $15.44 | $0.00 | $66.18 |

**Effective Date -** 07/01/2015

| Step | percent | Apprentice Base Wage | Health | Pension | Supplemental Unemployment | Total Rate |
|---|---|---|---|---|---|---|
| 1 | 50 | $24.28 | $7.85 | $0.00 | $0.00 | $32.13 |
| 2 | 55 | $26.71 | $7.85 | $3.66 | $0.00 | $38.22 |
| 3 | 60 | $29.14 | $7.85 | $3.99 | $0.00 | $40.98 |
| 4 | 65 | $31.56 | $7.85 | $4.32 | $0.00 | $43.73 |
| 5 | 70 | $33.99 | $7.85 | $14.11 | $0.00 | $55.95 |
| 6 | 75 | $36.42 | $7.85 | $14.44 | $0.00 | $58.71 |
| 7 | 80 | $38.85 | $7.85 | $14.77 | $0.00 | $61.47 |
| 8 | 90 | $43.70 | $7.85 | $15.44 | $0.00 | $66.99 |

**Notes:**

Steps are 750 hrs.

**Apprentice to Journeyworker Ratio:1:1**

| | | | | | | |
|---|---|---|---|---|---|---|
| DEMO: ADZEMAN<br>*LABORERS - ZONE 1* | 06/01/2015 | $35.25 | $7.30 | $13.20 | $0.00 | $55.75 |
| | 12/01/2015 | $36.00 | $7.30 | $13.20 | $0.00 | $56.50 |
| For apprentice rates see "Apprentice- LABORER" | | | | | | |
| DEMO: BACKHOE/LOADER/HAMMER OPERATOR<br>*LABORERS - ZONE 1* | 06/01/2015 | $36.25 | $7.30 | $13.20 | $0.00 | $56.75 |
| | 12/01/2015 | $37.00 | $7.30 | $13.20 | $0.00 | $57.50 |
| For apprentice rates see "Apprentice- LABORER" | | | | | | |
| DEMO: BURNERS<br>*LABORERS - ZONE 1* | 06/01/2015 | $36.00 | $7.30 | $13.20 | $0.00 | $56.50 |
| | 12/01/2015 | $36.75 | $7.30 | $13.20 | $0.00 | $57.25 |
| For apprentice rates see "Apprentice- LABORER" | | | | | | |
| DEMO: CONCRETE CUTTER/SAWYER<br>*LABORERS - ZONE 1* | 06/01/2015 | $36.25 | $7.30 | $13.20 | $0.00 | $56.75 |
| | 12/01/2015 | $37.00 | $7.30 | $13.20 | $0.00 | $57.50 |
| For apprentice rates see "Apprentice- LABORER" | | | | | | |

| Classification | Effective Date | Base Wage | Health | Pension | Supplemental Unemployment | Total Rate |
|---|---|---|---|---|---|---|
| DEMO: JACKHAMMER OPERATOR<br>*LABORERS - ZONE 1* | 06/01/2015 | $36.00 | $7.30 | $13.20 | $0.00 | $56.50 |
| | 12/01/2015 | $36.75 | $7.30 | $13.20 | $0.00 | $57.25 |
| For apprentice rates see "Apprentice- LABORER" | | | | | | |
| DEMO: WRECKING LABORER<br>*LABORERS - ZONE 1* | 06/01/2015 | $35.25 | $7.30 | $13.20 | $0.00 | $55.75 |
| | 12/01/2015 | $36.00 | $7.30 | $13.20 | $0.00 | $56.50 |
| For apprentice rates see "Apprentice- LABORER" | | | | | | |
| DIRECTIONAL DRILL MACHINE OPERATOR<br>*OPERATING ENGINEERS LOCAL 4* | 06/01/2015 | $42.42 | $10.00 | $14.55 | $0.00 | $66.97 |
| | 12/01/2015 | $43.66 | $10.00 | $14.55 | $0.00 | $68.21 |
| | 06/01/2016 | $44.41 | $10.00 | $14.55 | $0.00 | $68.96 |
| | 12/01/2016 | $45.64 | $10.00 | $14.55 | $0.00 | $70.19 |
| | 06/01/2017 | $46.63 | $10.00 | $14.55 | $0.00 | $71.18 |
| | 12/01/2017 | $47.62 | $10.00 | $14.55 | $0.00 | $72.17 |
| For apprentice rates see "Apprentice- OPERATING ENGINEERS" | | | | | | |
| DIVER<br>*PILE DRIVER LOCAL 56 (ZONE 1)* | 08/01/2014 | $58.24 | $9.80 | $18.17 | $0.00 | $86.21 |
| | 08/01/2015 | $60.34 | $9.80 | $18.17 | $0.00 | $88.31 |
| DIVER TENDER<br>*PILE DRIVER LOCAL 56 (ZONE 1)* | 08/01/2014 | $41.60 | $9.80 | $18.17 | $0.00 | $69.57 |
| | 08/01/2015 | $43.10 | $9.80 | $18.17 | $0.00 | $71.07 |
| DIVER TENDER (EFFLUENT)<br>*PILE DRIVER LOCAL 56 (ZONE 1)* | 08/01/2014 | $62.40 | $9.80 | $18.17 | $0.00 | $90.37 |
| | 08/01/2015 | $64.65 | $9.80 | $18.17 | $0.00 | $92.62 |
| DIVER/SLURRY (EFFLUENT)<br>*PILE DRIVER LOCAL 56 (ZONE 1)* | 08/01/2014 | $87.36 | $9.80 | $18.17 | $0.00 | $115.33 |
| | 08/01/2015 | $90.51 | $9.80 | $18.17 | $0.00 | $118.48 |
| DRAWBRIDGE OPERATOR (Construction)<br>*ELECTRICIANS LOCAL 103* | 03/01/2015 | $45.17 | $13.00 | $15.40 | $0.00 | $73.57 |
| | 09/01/2015 | $46.13 | $13.00 | $15.43 | $0.00 | $74.56 |
| | 03/01/2016 | $47.08 | $13.00 | $15.46 | $0.00 | $75.54 |
| For apprentice rates see "Apprentice- ELECTRICIAN" | | | | | | |
| ELECTRICIAN<br>*ELECTRICIANS LOCAL 103* | 03/01/2015 | $45.17 | $13.00 | $15.40 | $0.00 | $73.57 |
| | 09/01/2015 | $46.13 | $13.00 | $15.43 | $0.00 | $74.56 |
| | 03/01/2016 | $47.08 | $13.00 | $15.46 | $0.00 | $75.54 |

| Classification | Effective Date | Base Wage | Health | Pension | Supplemental Unemployment | Total Rate |
|---|---|---|---|---|---|---|

**Apprentice -** *ELECTRICIAN - Local 103*

**Effective Date -** 03/01/2015

| Step | percent | Apprentice Base Wage | Health | Pension | Supplemental Unemployment | Total Rate |
|---|---|---|---|---|---|---|
| 1 | 40 | $18.07 | $13.00 | $0.54 | $0.00 | $31.61 |
| 2 | 40 | $18.07 | $13.00 | $0.54 | $0.00 | $31.61 |
| 3 | 45 | $20.33 | $13.00 | $11.64 | $0.00 | $44.97 |
| 4 | 45 | $20.33 | $13.00 | $11.64 | $0.00 | $44.97 |
| 5 | 50 | $22.59 | $13.00 | $11.98 | $0.00 | $47.57 |
| 6 | 55 | $24.84 | $13.00 | $12.33 | $0.00 | $50.17 |
| 7 | 60 | $27.10 | $13.00 | $12.66 | $0.00 | $52.76 |
| 8 | 65 | $29.36 | $13.00 | $13.01 | $0.00 | $55.37 |
| 9 | 70 | $31.62 | $13.00 | $13.35 | $0.00 | $57.97 |
| 10 | 75 | $33.88 | $13.00 | $13.70 | $0.00 | $60.58 |

**Effective Date -** 09/01/2015

| Step | percent | Apprentice Base Wage | Health | Pension | Supplemental Unemployment | Total Rate |
|---|---|---|---|---|---|---|
| 1 | 40 | $18.45 | $13.00 | $0.55 | $0.00 | $32.00 |
| 2 | 40 | $18.45 | $13.00 | $0.55 | $0.00 | $32.00 |
| 3 | 45 | $20.76 | $13.00 | $11.65 | $0.00 | $45.41 |
| 4 | 45 | $20.76 | $13.00 | $11.65 | $0.00 | $45.41 |
| 5 | 50 | $23.07 | $13.00 | $11.99 | $0.00 | $48.06 |
| 6 | 55 | $25.37 | $13.00 | $12.34 | $0.00 | $50.71 |
| 7 | 60 | $27.68 | $13.00 | $12.68 | $0.00 | $53.36 |
| 8 | 65 | $29.98 | $13.00 | $13.03 | $0.00 | $56.01 |
| 9 | 70 | $32.29 | $13.00 | $13.37 | $0.00 | $58.66 |
| 10 | 75 | $34.60 | $13.00 | $13.72 | $0.00 | $61.32 |

**Notes:** :

App Prior 1/1/03; 30/35/40/45/50/55/65/70/75/80

**Apprentice to Journeyworker Ratio:2:3*****

| | | | | | | |
|---|---|---|---|---|---|---|
| ELEVATOR CONSTRUCTOR<br>*ELEVATOR CONSTRUCTORS LOCAL 4* | 01/01/2015 | $53.30 | $13.58 | $14.21 | $0.00 | $81.09 |
| | 01/01/2016 | $54.53 | $14.43 | $14.96 | $0.00 | $83.92 |
| | 01/01/2017 | $55.86 | $15.28 | $15.71 | $0.00 | $86.85 |

| Classification | Effective Date | Base Wage | Health | Pension | Supplemental Unemployment | Total Rate |
|---|---|---|---|---|---|---|

**Apprentice -** *ELEVATOR CONSTRUCTOR - Local 4*

**Effective Date -** 01/01/2015

| Step | percent | Apprentice Base Wage | Health | Pension | Supplemental Unemployment | Total Rate |
|---|---|---|---|---|---|---|
| 1 | 50 | $26.65 | $13.58 | $0.00 | $0.00 | $40.23 |
| 2 | 55 | $29.32 | $13.58 | $14.21 | $0.00 | $57.11 |
| 3 | 65 | $34.65 | $13.58 | $14.21 | $0.00 | $62.44 |
| 4 | 70 | $37.31 | $13.58 | $14.21 | $0.00 | $65.10 |
| 5 | 80 | $42.64 | $13.58 | $14.21 | $0.00 | $70.43 |

**Effective Date -** 01/01/2016

| Step | percent | Apprentice Base Wage | Health | Pension | Supplemental Unemployment | Total Rate |
|---|---|---|---|---|---|---|
| 1 | 50 | $27.27 | $14.43 | $0.00 | $0.00 | $41.70 |
| 2 | 55 | $29.99 | $14.43 | $14.96 | $0.00 | $59.38 |
| 3 | 65 | $35.44 | $14.43 | $14.96 | $0.00 | $64.83 |
| 4 | 70 | $38.17 | $14.43 | $14.96 | $0.00 | $67.56 |
| 5 | 80 | $43.62 | $14.43 | $14.96 | $0.00 | $73.01 |

**Notes:**

Steps 1-2 are 6 mos.; Steps 3-5 are 1 year

**Apprentice to Journeyworker Ratio:1:1**

| | | | | | | |
|---|---|---|---|---|---|---|
| ELEVATOR CONSTRUCTOR HELPER<br>*ELEVATOR CONSTRUCTORS LOCAL 4* | 01/01/2015 | $37.31 | $13.58 | $14.21 | $0.00 | $65.10 |
| | 01/01/2016 | $38.17 | $14.43 | $14.96 | $0.00 | $67.56 |
| | 01/01/2017 | $39.10 | $15.28 | $15.71 | $0.00 | $70.09 |
| For apprentice rates see "Apprentice - ELEVATOR CONSTRUCTOR" | | | | | | |
| FENCE & GUARD RAIL ERECTOR<br>*LABORERS - ZONE 1* | 06/01/2015 | $35.35 | $7.30 | $13.20 | $0.00 | $55.85 |
| | 12/01/2015 | $36.10 | $7.30 | $13.20 | $0.00 | $56.60 |
| | 06/01/2016 | $36.85 | $7.30 | $13.20 | $0.00 | $57.35 |
| | 12/01/2016 | $37.85 | $7.30 | $13.20 | $0.00 | $58.35 |
| For apprentice rates see "Apprentice- LABORER" | | | | | | |
| FIELD ENG.INST.PERSON-BLDG,SITE,HVY/HWY<br>*OPERATING ENGINEERS LOCAL 4* | 05/01/2015 | $40.22 | $10.00 | $14.30 | $0.00 | $64.52 |
| | 11/01/2015 | $40.80 | $10.00 | $14.30 | $0.00 | $65.10 |
| | 05/01/2016 | $41.69 | $10.00 | $14.30 | $0.00 | $65.99 |
| | 11/01/2016 | $42.28 | $10.00 | $14.30 | $0.00 | $66.58 |
| | 05/01/2017 | $43.16 | $10.00 | $14.30 | $0.00 | $67.46 |
| | 11/01/2017 | $43.89 | $10.00 | $14.30 | $0.00 | $68.19 |
| | 05/01/2018 | $44.60 | $10.00 | $14.30 | $0.00 | $68.90 |
| For apprentice rates see "Apprentice- OPERATING ENGINEERS" | | | | | | |
| FIELD ENG.PARTY CHIEF-BLDG,SITE,HVY/HWY<br>*OPERATING ENGINEERS LOCAL 4* | 05/01/2015 | $41.65 | $10.00 | $14.30 | $0.00 | $65.95 |
| | 11/01/2015 | $42.24 | $10.00 | $14.30 | $0.00 | $66.54 |
| | 05/01/2016 | $43.13 | $10.00 | $14.30 | $0.00 | $67.43 |
| | 11/01/2016 | $43.73 | $10.00 | $14.30 | $0.00 | $68.03 |
| | 05/01/2017 | $44.62 | $10.00 | $14.30 | $0.00 | $68.92 |
| | 11/01/2017 | $45.35 | $10.00 | $14.30 | $0.00 | $69.65 |
| | 05/01/2018 | $46.07 | $10.00 | $14.30 | $0.00 | $70.37 |
| For apprentice rates see "Apprentice- OPERATING ENGINEERS" | | | | | | |

| Classification | Effective Date | Base Wage | Health | Pension | Supplemental Unemployment | Total Rate |
|---|---|---|---|---|---|---|
| FIELD ENG.ROD PERSON-BLDG,SITE,HVY/HWY<br>*OPERATING ENGINEERS LOCAL 4* | 05/01/2015 | $21.68 | $10.00 | $14.30 | $0.00 | $45.98 |
| | 11/01/2015 | $22.02 | $10.00 | $14.30 | $0.00 | $46.32 |
| | 05/01/2016 | $22.54 | $10.00 | $14.30 | $0.00 | $46.84 |
| | 11/01/2016 | $22.89 | $10.00 | $14.30 | $0.00 | $47.19 |
| | 05/01/2017 | $23.42 | $10.00 | $14.30 | $0.00 | $47.72 |
| | 11/01/2017 | $23.84 | $10.00 | $14.30 | $0.00 | $48.14 |
| | 05/01/2018 | $24.27 | $10.00 | $14.30 | $0.00 | $48.57 |
| For apprentice rates see "Apprentice- OPERATING ENGINEERS" | | | | | | |
| FIRE ALARM INSTALLER<br>*ELECTRICIANS LOCAL 103* | 03/01/2015 | $45.17 | $13.00 | $15.40 | $0.00 | $73.57 |
| | 09/01/2015 | $46.13 | $13.00 | $15.43 | $0.00 | $74.56 |
| | 03/01/2016 | $47.08 | $13.00 | $15.46 | $0.00 | $75.54 |
| For apprentice rates see "Apprentice- ELECTRICIAN" | | | | | | |
| FIRE ALARM REPAIR / MAINTENANCE / COMMISSIONING*ELECTRICIANS LOCAL 103* | 03/01/2015 | $33.88 | $13.00 | $13.70 | $0.00 | $60.58 |
| | 09/01/2015 | $34.60 | $13.00 | $13.72 | $0.00 | $61.32 |
| | 03/01/2016 | $35.31 | $13.00 | $13.74 | $0.00 | $62.05 |
| For apprentice rates see "Apprentice- TELECOMMUNICATIONS TECHNICIAN" | | | | | | |
| FIREMAN (ASST. ENGINEER)<br>*OPERATING ENGINEERS LOCAL 4* | 06/01/2015 | $35.64 | $10.00 | $14.55 | $0.00 | $60.19 |
| | 12/01/2015 | $36.69 | $10.00 | $14.55 | $0.00 | $61.24 |
| | 06/01/2016 | $37.31 | $10.00 | $14.55 | $0.00 | $61.86 |
| | 12/01/2016 | $38.35 | $10.00 | $14.55 | $0.00 | $62.90 |
| | 06/01/2017 | $39.19 | $10.00 | $14.55 | $0.00 | $63.74 |
| | 12/01/2017 | $40.02 | $10.00 | $14.55 | $0.00 | $64.57 |
| For apprentice rates see "Apprentice- OPERATING ENGINEERS" | | | | | | |
| FLAGGER & SIGNALER<br>*LABORERS - ZONE 1* | 06/01/2015 | $20.50 | $7.30 | $13.20 | $0.00 | $41.00 |
| | 12/01/2015 | $20.50 | $7.30 | $13.20 | $0.00 | $41.00 |
| | 06/01/2016 | $20.50 | $7.30 | $13.20 | $0.00 | $41.00 |
| | 12/01/2016 | $20.50 | $7.30 | $13.20 | $0.00 | $41.00 |
| For apprentice rates see "Apprentice- LABORER" | | | | | | |
| FLOORCOVERER<br>*FLOORCOVERERS LOCAL 2168 ZONE 1* | 09/01/2014 | $40.40 | $9.80 | $17.21 | $0.00 | $67.41 |

| Classification | Effective Date | Base Wage | Health | Pension | Supplemental Unemployment | Total Rate |
|---|---|---|---|---|---|---|

**Apprentice -** *FLOORCOVERER - Local 2168 Zone I*

**Effective Date -** 09/01/2014

| Step | percent | Apprentice Base Wage | Health | Pension | Supplemental Unemployment | Total Rate |
|---|---|---|---|---|---|---|
| 1 | 50 | $20.20 | $9.80 | $1.79 | $0.00 | $31.79 |
| 2 | 55 | $22.22 | $9.80 | $1.79 | $0.00 | $33.81 |
| 3 | 60 | $24.24 | $9.80 | $11.84 | $0.00 | $45.88 |
| 4 | 65 | $26.26 | $9.80 | $11.84 | $0.00 | $47.90 |
| 5 | 70 | $28.28 | $9.80 | $13.63 | $0.00 | $51.71 |
| 6 | 75 | $30.30 | $9.80 | $13.63 | $0.00 | $53.73 |
| 7 | 80 | $32.32 | $9.80 | $15.42 | $0.00 | $57.54 |
| 8 | 85 | $34.34 | $9.80 | $15.42 | $0.00 | $59.56 |

**Notes:**

Steps are 750 hrs.

**Apprentice to Journeyworker Ratio:1:1**

| | | | | | | |
|---|---|---|---|---|---|---|
| FORK LIFT/CHERRY PICKER<br>*OPERATING ENGINEERS LOCAL 4* | 06/01/2015 | $42.83 | $10.00 | $14.55 | $0.00 | $67.38 |
| | 12/01/2015 | $44.08 | $10.00 | $14.55 | $0.00 | $68.63 |
| | 06/01/2016 | $44.83 | $10.00 | $14.55 | $0.00 | $69.38 |
| | 12/01/2016 | $46.08 | $10.00 | $14.55 | $0.00 | $70.63 |
| | 06/01/2017 | $47.08 | $10.00 | $14.55 | $0.00 | $71.63 |
| | 12/01/2017 | $48.08 | $10.00 | $14.55 | $0.00 | $72.63 |
| For apprentice rates see "Apprentice- OPERATING ENGINEERS" | | | | | | |
| GENERATOR/LIGHTING PLANT/HEATERS<br>*OPERATING ENGINEERS LOCAL 4* | 06/01/2015 | $29.61 | $10.00 | $14.55 | $0.00 | $54.16 |
| | 12/01/2015 | $30.48 | $10.00 | $14.55 | $0.00 | $55.03 |
| | 06/01/2016 | $31.00 | $10.00 | $14.55 | $0.00 | $55.55 |
| | 12/01/2016 | $31.87 | $10.00 | $14.55 | $0.00 | $56.42 |
| | 06/01/2017 | $32.56 | $10.00 | $14.55 | $0.00 | $57.11 |
| | 12/01/2017 | $33.25 | $10.00 | $14.55 | $0.00 | $57.80 |
| For apprentice rates see "Apprentice- OPERATING ENGINEERS" | | | | | | |
| GLAZIER (GLASS PLANK/AIR BARRIER/INTERIOR SYSTEMS)<br>*GLAZIERS LOCAL 35 (ZONE 1)* | 01/01/2015 | $42.95 | $7.85 | $16.10 | $0.00 | $66.90 |
| | 07/01/2015 | $43.85 | $7.85 | $16.10 | $0.00 | $67.80 |
| | 01/01/2016 | $44.80 | $7.85 | $16.10 | $0.00 | $68.75 |
| | 07/01/2016 | $45.75 | $7.85 | $16.10 | $0.00 | $69.70 |
| | 01/01/2017 | $46.70 | $7.85 | $16.10 | $0.00 | $70.65 |

| Classification | Effective Date | Base Wage | Health | Pension | Supplemental Unemployment | Total Rate |
|---|---|---|---|---|---|---|

**Apprentice -** *GLAZIER - Local 35 Zone 1*

**Effective Date -** 01/01/2015

| Step | percent | Apprentice Base Wage | Health | Pension | Supplemental Unemployment | Total Rate |
|---|---|---|---|---|---|---|
| 1 | 50 | $21.48 | $7.85 | $0.00 | $0.00 | $29.33 |
| 2 | 55 | $23.62 | $7.85 | $3.66 | $0.00 | $35.13 |
| 3 | 60 | $25.77 | $7.85 | $3.99 | $0.00 | $37.61 |
| 4 | 65 | $27.92 | $7.85 | $4.32 | $0.00 | $40.09 |
| 5 | 70 | $30.07 | $7.85 | $14.11 | $0.00 | $52.03 |
| 6 | 75 | $32.21 | $7.85 | $14.44 | $0.00 | $54.50 |
| 7 | 80 | $34.36 | $7.85 | $14.77 | $0.00 | $56.98 |
| 8 | 90 | $38.66 | $7.85 | $15.44 | $0.00 | $61.95 |

**Effective Date -** 07/01/2015

| Step | percent | Apprentice Base Wage | Health | Pension | Supplemental Unemployment | Total Rate |
|---|---|---|---|---|---|---|
| 1 | 50 | $21.93 | $7.85 | $0.00 | $0.00 | $29.78 |
| 2 | 55 | $24.12 | $7.85 | $3.66 | $0.00 | $35.63 |
| 3 | 60 | $26.31 | $7.85 | $3.99 | $0.00 | $38.15 |
| 4 | 65 | $28.50 | $7.85 | $4.32 | $0.00 | $40.67 |
| 5 | 70 | $30.70 | $7.85 | $14.11 | $0.00 | $52.66 |
| 6 | 75 | $32.89 | $7.85 | $14.44 | $0.00 | $55.18 |
| 7 | 80 | $35.08 | $7.85 | $14.77 | $0.00 | $57.70 |
| 8 | 90 | $39.47 | $7.85 | $15.44 | $0.00 | $62.76 |

**Notes:**

Steps are 750 hrs.

**Apprentice to Journeyworker Ratio:1:1**

| | | | | | | |
|---|---|---|---|---|---|---|
| HOISTING ENGINEER/CRANES/GRADALLS<br>*OPERATING ENGINEERS LOCAL 4* | 06/01/2015 | $42.83 | $10.00 | $14.55 | $0.00 | $67.38 |
| | 12/01/2015 | $44.08 | $10.00 | $14.55 | $0.00 | $68.63 |
| | 06/01/2016 | $44.83 | $10.00 | $14.55 | $0.00 | $69.38 |
| | 12/01/2016 | $46.08 | $10.00 | $14.55 | $0.00 | $70.63 |
| | 06/01/2017 | $47.08 | $10.00 | $14.55 | $0.00 | $71.63 |
| | 12/01/2017 | $48.08 | $10.00 | $14.55 | $0.00 | $72.63 |

| Classification | Effective Date | Base Wage | Health | Pension | Supplemental Unemployment | Total Rate |
|---|---|---|---|---|---|---|

**Apprentice -** *OPERATING ENGINEERS - Local 4*

**Effective Date -** 06/01/2015

| Step | percent | Apprentice Base Wage | Health | Pension | Supplemental Unemployment | Total Rate |
|---|---|---|---|---|---|---|
| 1 | 55 | $23.56 | $10.00 | $0.00 | $0.00 | $33.56 |
| 2 | 60 | $25.70 | $10.00 | $14.55 | $0.00 | $50.25 |
| 3 | 65 | $27.84 | $10.00 | $14.55 | $0.00 | $52.39 |
| 4 | 70 | $29.98 | $10.00 | $14.55 | $0.00 | $54.53 |
| 5 | 75 | $32.12 | $10.00 | $14.55 | $0.00 | $56.67 |
| 6 | 80 | $34.26 | $10.00 | $14.55 | $0.00 | $58.81 |
| 7 | 85 | $36.41 | $10.00 | $14.55 | $0.00 | $60.96 |
| 8 | 90 | $38.55 | $10.00 | $14.55 | $0.00 | $63.10 |

**Effective Date -** 12/01/2015

| Step | percent | Apprentice Base Wage | Health | Pension | Supplemental Unemployment | Total Rate |
|---|---|---|---|---|---|---|
| 1 | 55 | $24.24 | $10.00 | $0.00 | $0.00 | $34.24 |
| 2 | 60 | $26.45 | $10.00 | $14.55 | $0.00 | $51.00 |
| 3 | 65 | $28.65 | $10.00 | $14.55 | $0.00 | $53.20 |
| 4 | 70 | $30.86 | $10.00 | $14.55 | $0.00 | $55.41 |
| 5 | 75 | $33.06 | $10.00 | $14.55 | $0.00 | $57.61 |
| 6 | 80 | $35.26 | $10.00 | $14.55 | $0.00 | $59.81 |
| 7 | 85 | $37.47 | $10.00 | $14.55 | $0.00 | $62.02 |
| 8 | 90 | $39.67 | $10.00 | $14.55 | $0.00 | $64.22 |

**Notes:**

**Apprentice to Journeyworker Ratio:1:6**

| | | | | | | |
|---|---|---|---|---|---|---|
| HVAC (DUCTWORK)<br>*SHEETMETAL WORKERS LOCAL 17 - A* | 02/01/2015 | $43.28 | $10.20 | $20.54 | $2.22 | $76.24 |
| | 08/01/2015 | $44.28 | $10.20 | $20.54 | $2.22 | $77.24 |
| | 02/01/2016 | $45.28 | $10.20 | $20.54 | $2.22 | $78.24 |
| | 08/01/2016 | $46.43 | $10.20 | $20.54 | $2.22 | $79.39 |
| | 02/01/2017 | $47.53 | $10.20 | $20.54 | $2.22 | $80.49 |
| | 08/01/2017 | $48.63 | $10.20 | $20.54 | $2.22 | $81.59 |
| | 02/01/2018 | $49.78 | $10.20 | $20.54 | $2.22 | $82.74 |

For apprentice rates see "Apprentice- SHEET METAL WORKER"

| | | | | | | |
|---|---|---|---|---|---|---|
| HVAC (ELECTRICAL CONTROLS)<br>*ELECTRICIANS LOCAL 103* | 03/01/2015 | $45.17 | $13.00 | $15.40 | $0.00 | $73.57 |
| | 09/01/2015 | $46.13 | $13.00 | $15.43 | $0.00 | $74.56 |
| | 03/01/2016 | $47.08 | $13.00 | $15.46 | $0.00 | $75.54 |

For apprentice rates see "Apprentice- ELECTRICIAN"

| Classification | Effective Date | Base Wage | Health | Pension | Supplemental Unemployment | Total Rate |
|---|---|---|---|---|---|---|
| HVAC (TESTING AND BALANCING - AIR)<br>*SHEETMETAL WORKERS LOCAL 17 - A* | 02/01/2015 | $43.28 | $10.20 | $20.54 | $2.22 | $76.24 |
| | 08/01/2015 | $44.28 | $10.20 | $20.54 | $2.22 | $77.24 |
| | 02/01/2016 | $45.28 | $10.20 | $20.54 | $2.22 | $78.24 |
| | 08/01/2016 | $46.43 | $10.20 | $20.54 | $2.22 | $79.39 |
| | 02/01/2017 | $47.53 | $10.20 | $20.54 | $2.22 | $80.49 |
| | 08/01/2017 | $48.63 | $10.20 | $20.54 | $2.22 | $81.59 |
| | 02/01/2018 | $49.78 | $10.20 | $20.54 | $2.22 | $82.74 |
| For apprentice rates see "Apprentice- SHEET METAL WORKER" | | | | | | |
| HVAC (TESTING AND BALANCING -WATER)<br>*PIPEFITTERS LOCAL 537* | 03/01/2015 | $48.69 | $9.70 | $16.89 | $0.00 | $75.28 |
| | 09/01/2015 | $49.69 | $9.70 | $16.89 | $0.00 | $76.28 |
| | 03/01/2016 | $50.69 | $9.70 | $16.89 | $0.00 | $77.28 |
| | 09/01/2016 | $51.69 | $9.70 | $16.89 | $0.00 | $78.28 |
| | 03/01/2017 | $52.69 | $9.70 | $16.89 | $0.00 | $79.28 |
| For apprentice rates see "Apprentice- PIPEFITTER" or "PLUMBER/PIPEFITTER" | | | | | | |
| HVAC MECHANIC<br>*PIPEFITTERS LOCAL 537* | 03/01/2015 | $48.69 | $9.70 | $16.89 | $0.00 | $75.28 |
| | 09/01/2015 | $49.69 | $9.70 | $16.89 | $0.00 | $76.28 |
| | 03/01/2016 | $50.69 | $9.70 | $16.89 | $0.00 | $77.28 |
| | 09/01/2016 | $51.69 | $9.70 | $16.89 | $0.00 | $78.28 |
| | 03/01/2017 | $52.69 | $9.70 | $16.89 | $0.00 | $79.28 |
| For apprentice rates see "Apprentice- PIPEFITTER" or "PLUMBER/PIPEFITTER" | | | | | | |
| HYDRAULIC DRILLS<br>*LABORERS - ZONE 1* | 06/01/2015 | $35.85 | $7.30 | $13.20 | $0.00 | $56.35 |
| | 12/01/2015 | $36.60 | $7.30 | $13.20 | $0.00 | $57.10 |
| | 06/01/2016 | $37.35 | $7.30 | $13.20 | $0.00 | $57.85 |
| | 12/01/2016 | $38.35 | $7.30 | $13.20 | $0.00 | $58.85 |
| For apprentice rates see "Apprentice- LABORER" | | | | | | |
| INSULATOR (PIPES & TANKS)<br>*HEAT & FROST INSULATORS LOCAL 6 (BOSTON)* | 09/01/2014 | $43.31 | $11.25 | $12.60 | $0.00 | $67.16 |

**Apprentice -** *ASBESTOS INSULATOR (Pipes & Tanks) - Local 6 Boston*

**Effective Date -** 09/01/2014

| Step | percent | Apprentice Base Wage | Health | Pension | Supplemental Unemployment | Total Rate |
|---|---|---|---|---|---|---|
| 1 | 50 | $21.66 | $11.25 | $9.35 | $0.00 | $42.26 |
| 2 | 60 | $25.99 | $11.25 | $10.00 | $0.00 | $47.24 |
| 3 | 70 | $30.32 | $11.25 | $10.65 | $0.00 | $52.22 |
| 4 | 80 | $34.65 | $11.25 | $11.30 | $0.00 | $57.20 |

**Notes:**

Steps are 1 year

**Apprentice to Journeyworker Ratio:1:4**

| | | | | | | |
|---|---|---|---|---|---|---|
| IRONWORKER/WELDER<br>*IRONWORKERS LOCAL 7 (BOSTON AREA)* | 03/16/2015 | $42.11 | $7.70 | $20.25 | $0.00 | $70.06 |

| Classification | Effective Date | Base Wage | Health | Pension | Supplemental Unemployment | Total Rate |
|---|---|---|---|---|---|---|

**Apprentice -** *IRONWORKER - Local 7 Boston*

**Effective Date -** 03/16/2015

| Step | percent | Apprentice Base Wage | Health | Pension | Supplemental Unemployment | Total Rate |
|---|---|---|---|---|---|---|
| 1 | 60 | $25.27 | $7.70 | $20.25 | $0.00 | $53.22 |
| 2 | 70 | $29.48 | $7.70 | $20.25 | $0.00 | $57.43 |
| 3 | 75 | $31.58 | $7.70 | $20.25 | $0.00 | $59.53 |
| 4 | 80 | $33.69 | $7.70 | $20.25 | $0.00 | $61.64 |
| 5 | 85 | $35.79 | $7.70 | $20.25 | $0.00 | $63.74 |
| 6 | 90 | $37.90 | $7.70 | $20.25 | $0.00 | $65.85 |

**Notes:**

** Structural 1:6; Ornamental 1:4

**Apprentice to Journeyworker Ratio:****

| | | | | | | |
|---|---|---|---|---|---|---|
| JACKHAMMER & PAVING BREAKER OPERATOR<br>*LABORERS - ZONE 1* | 06/01/2015 | $35.35 | $7.30 | $13.20 | $0.00 | $55.85 |
| | 12/01/2015 | $36.10 | $7.30 | $13.20 | $0.00 | $56.60 |
| | 06/01/2016 | $36.85 | $7.30 | $13.20 | $0.00 | $57.35 |
| | 12/01/2016 | $37.85 | $7.30 | $13.20 | $0.00 | $58.35 |

For apprentice rates see "Apprentice- LABORER"

| | | | | | | |
|---|---|---|---|---|---|---|
| LABORER<br>*LABORERS - ZONE 1* | 06/01/2015 | $35.10 | $7.30 | $13.20 | $0.00 | $55.60 |
| | 12/01/2015 | $35.85 | $7.30 | $13.20 | $0.00 | $56.35 |
| | 06/01/2016 | $36.60 | $7.30 | $13.20 | $0.00 | $57.10 |
| | 12/01/2016 | $37.60 | $7.30 | $13.20 | $0.00 | $58.10 |

**Apprentice -** *LABORER - Zone 1*

**Effective Date -** 06/01/2015

| Step | percent | Apprentice Base Wage | Health | Pension | Supplemental Unemployment | Total Rate |
|---|---|---|---|---|---|---|
| 1 | 60 | $21.06 | $7.30 | $13.20 | $0.00 | $41.56 |
| 2 | 70 | $24.57 | $7.30 | $13.20 | $0.00 | $45.07 |
| 3 | 80 | $28.08 | $7.30 | $13.20 | $0.00 | $48.58 |
| 4 | 90 | $31.59 | $7.30 | $13.20 | $0.00 | $52.09 |

**Effective Date -** 12/01/2015

| Step | percent | Apprentice Base Wage | Health | Pension | Supplemental Unemployment | Total Rate |
|---|---|---|---|---|---|---|
| 1 | 60 | $21.51 | $7.30 | $13.20 | $0.00 | $42.01 |
| 2 | 70 | $25.10 | $7.30 | $13.20 | $0.00 | $45.60 |
| 3 | 80 | $28.68 | $7.30 | $13.20 | $0.00 | $49.18 |
| 4 | 90 | $32.27 | $7.30 | $13.20 | $0.00 | $52.77 |

**Notes:**

**Apprentice to Journeyworker Ratio:1:5**

| Classification | Effective Date | Base Wage | Health | Pension | Supplemental Unemployment | Total Rate |
|---|---|---|---|---|---|---|
| LABORER: CARPENTER TENDER<br>*LABORERS - ZONE 1* | 06/01/2015 | $35.10 | $7.30 | $13.20 | $0.00 | $55.60 |
| | 12/01/2015 | $35.85 | $7.30 | $13.20 | $0.00 | $56.35 |
| | 06/01/2016 | $36.60 | $7.30 | $13.20 | $0.00 | $57.10 |
| | 12/01/2016 | $37.60 | $7.30 | $13.20 | $0.00 | $58.10 |
| For apprentice rates see "Apprentice- LABORER" | | | | | | |
| LABORER: CEMENT FINISHER TENDER<br>*LABORERS - ZONE 1* | 06/01/2015 | $35.10 | $7.30 | $13.20 | $0.00 | $55.60 |
| | 12/01/2015 | $35.85 | $7.30 | $13.20 | $0.00 | $56.35 |
| | 06/01/2016 | $36.60 | $7.30 | $13.20 | $0.00 | $57.10 |
| | 12/01/2016 | $37.60 | $7.30 | $13.20 | $0.00 | $58.10 |
| For apprentice rates see "Apprentice- LABORER" | | | | | | |
| LABORER: HAZARDOUS WASTE/ASBESTOS REMOVER<br>*LABORERS - ZONE 1* | 06/01/2015 | $35.25 | $7.30 | $13.20 | $0.00 | $55.75 |
| | 12/01/2015 | $36.00 | $7.30 | $13.20 | $0.00 | $56.50 |
| For apprentice rates see "Apprentice- LABORER" | | | | | | |
| LABORER: MASON TENDER<br>*LABORERS - ZONE 1* | 06/01/2015 | $35.35 | $7.30 | $13.20 | $0.00 | $55.85 |
| | 12/01/2015 | $36.10 | $7.30 | $13.20 | $0.00 | $56.60 |
| | 06/01/2016 | $36.85 | $7.30 | $13.20 | $0.00 | $57.35 |
| | 12/01/2016 | $37.85 | $7.30 | $13.20 | $0.00 | $58.35 |
| For apprentice rates see "Apprentice- LABORER" | | | | | | |
| LABORER: MULTI-TRADE TENDER<br>*LABORERS - ZONE 1* | 06/01/2015 | $35.10 | $7.30 | $13.20 | $0.00 | $55.60 |
| | 12/01/2015 | $35.85 | $7.30 | $13.20 | $0.00 | $56.35 |
| | 06/01/2016 | $36.60 | $7.30 | $13.20 | $0.00 | $57.10 |
| | 12/01/2016 | $37.60 | $7.30 | $13.20 | $0.00 | $58.10 |
| For apprentice rates see "Apprentice- LABORER" | | | | | | |
| LABORER: TREE REMOVER<br>*LABORERS - ZONE 1* | 06/01/2015 | $35.10 | $7.30 | $13.20 | $0.00 | $55.60 |
| | 12/01/2015 | $35.85 | $7.30 | $13.20 | $0.00 | $56.35 |
| | 06/01/2016 | $36.60 | $7.30 | $13.20 | $0.00 | $57.10 |
| | 12/01/2016 | $37.60 | $7.30 | $13.20 | $0.00 | $58.10 |
| This classification applies to all tree work associated with the removal of standing trees, and trimming and removal of branches and limbs when the work is not done for a utility company for the purpose of operation, maintenance or repair of utility company equipment. For apprentice rates see "Apprentice- LABORER" | | | | | | |
| LASER BEAM OPERATOR<br>*LABORERS - ZONE 1* | 06/01/2015 | $35.35 | $7.30 | $13.20 | $0.00 | $55.85 |
| | 12/01/2015 | $36.10 | $7.30 | $13.20 | $0.00 | $56.60 |
| | 06/01/2016 | $36.85 | $7.30 | $13.20 | $0.00 | $57.35 |
| | 12/01/2016 | $37.85 | $7.30 | $13.20 | $0.00 | $58.35 |
| For apprentice rates see "Apprentice- LABORER" | | | | | | |
| MARBLE & TILE FINISHERS<br>*BRICKLAYERS LOCAL 3 - MARBLE & TILE* | 02/01/2015 | $37.37 | $10.18 | $17.18 | $0.00 | $64.73 |
| | 08/01/2015 | $38.08 | $10.18 | $17.25 | $0.00 | $65.51 |
| | 02/01/2016 | $38.53 | $10.18 | $17.25 | $0.00 | $65.96 |
| | 08/01/2016 | $39.23 | $10.18 | $17.33 | $0.00 | $66.74 |
| | 02/01/2017 | $39.69 | $10.18 | $17.33 | $0.00 | $67.20 |

| Classification | Effective Date | Base Wage | Health | Pension | Supplemental Unemployment | Total Rate |
|---|---|---|---|---|---|---|

**Apprentice -** *MARBLE & TILE FINISHER - Local 3 Marble & Tile*

**Effective Date -** 02/01/2015

| Step | percent | Apprentice Base Wage | Health | Pension | Supplemental Unemployment | Total Rate |
|---|---|---|---|---|---|---|
| 1 | 50 | $18.69 | $10.18 | $17.18 | $0.00 | $46.05 |
| 2 | 60 | $22.42 | $10.18 | $17.18 | $0.00 | $49.78 |
| 3 | 70 | $26.16 | $10.18 | $17.18 | $0.00 | $53.52 |
| 4 | 80 | $29.90 | $10.18 | $17.18 | $0.00 | $57.26 |
| 5 | 90 | $33.63 | $10.18 | $17.18 | $0.00 | $60.99 |

**Effective Date -** 08/01/2015

| Step | percent | Apprentice Base Wage | Health | Pension | Supplemental Unemployment | Total Rate |
|---|---|---|---|---|---|---|
| 1 | 50 | $19.04 | $10.18 | $17.25 | $0.00 | $46.47 |
| 2 | 60 | $22.85 | $10.18 | $17.25 | $0.00 | $50.28 |
| 3 | 70 | $26.66 | $10.18 | $17.25 | $0.00 | $54.09 |
| 4 | 80 | $30.46 | $10.18 | $17.25 | $0.00 | $57.89 |
| 5 | 90 | $34.27 | $10.18 | $17.25 | $0.00 | $61.70 |

**Notes:**

**Apprentice to Journeyworker Ratio:1:3**

| | | | | | | |
|---|---|---|---|---|---|---|
| MARBLE MASONS,TILELAYERS & TERRAZZO MECH<br>*BRICKLAYERS LOCAL 3 - MARBLE & TILE* | 02/01/2015 | $49.00 | $10.18 | $18.50 | $0.00 | $77.68 |
| | 08/01/2015 | $49.90 | $10.18 | $18.57 | $0.00 | $78.65 |
| | 02/01/2016 | $50.47 | $10.18 | $18.57 | $0.00 | $79.22 |
| | 08/01/2016 | $51.37 | $10.18 | $18.65 | $0.00 | $80.20 |
| | 02/01/2017 | $51.94 | $10.18 | $18.65 | $0.00 | $80.77 |

| Classification | Effective Date | Base Wage | Health | Pension | Supplemental Unemployment | Total Rate |
|---|---|---|---|---|---|---|

**Apprentice -** *MARBLE-TILE-TERRAZZO MECHANIC - Local 3 Marble & Tile*

**Effective Date -** 02/01/2015

| Step | percent | Apprentice Base Wage | Health | Pension | Supplemental Unemployment | Total Rate |
|---|---|---|---|---|---|---|
| 1 | 50 | $24.50 | $10.18 | $18.50 | $0.00 | $53.18 |
| 2 | 60 | $29.40 | $10.18 | $18.50 | $0.00 | $58.08 |
| 3 | 70 | $34.30 | $10.18 | $18.50 | $0.00 | $62.98 |
| 4 | 80 | $39.20 | $10.18 | $18.50 | $0.00 | $67.88 |
| 5 | 90 | $44.10 | $10.18 | $18.50 | $0.00 | $72.78 |

**Effective Date -** 08/01/2015

| Step | percent | Apprentice Base Wage | Health | Pension | Supplemental Unemployment | Total Rate |
|---|---|---|---|---|---|---|
| 1 | 50 | $24.95 | $10.18 | $18.57 | $0.00 | $53.70 |
| 2 | 60 | $29.94 | $10.18 | $18.57 | $0.00 | $58.69 |
| 3 | 70 | $34.93 | $10.18 | $18.57 | $0.00 | $63.68 |
| 4 | 80 | $39.92 | $10.18 | $18.57 | $0.00 | $68.67 |
| 5 | 90 | $44.91 | $10.18 | $18.57 | $0.00 | $73.66 |

**Notes:**

**Apprentice to Journeyworker Ratio:1:5**

| | | | | | | |
|---|---|---|---|---|---|---|
| MECH. SWEEPER OPERATOR (ON CONST. SITES)<br>*OPERATING ENGINEERS LOCAL 4* | 06/01/2015 | $42.42 | $10.00 | $14.55 | $0.00 | $66.97 |
| | 12/01/2015 | $43.66 | $10.00 | $14.55 | $0.00 | $68.21 |
| | 06/01/2016 | $44.41 | $10.00 | $14.55 | $0.00 | $68.96 |
| | 12/01/2016 | $45.64 | $10.00 | $14.55 | $0.00 | $70.19 |
| | 06/01/2017 | $46.63 | $10.00 | $14.55 | $0.00 | $71.18 |
| | 12/01/2017 | $47.62 | $10.00 | $14.55 | $0.00 | $72.17 |
| For apprentice rates see "Apprentice- OPERATING ENGINEERS" | | | | | | |
| MECHANICS MAINTENANCE<br>*OPERATING ENGINEERS LOCAL 4* | 06/01/2015 | $42.42 | $10.00 | $14.55 | $0.00 | $66.97 |
| | 12/01/2015 | $43.66 | $10.00 | $14.55 | $0.00 | $68.21 |
| | 06/01/2016 | $44.41 | $10.00 | $14.55 | $0.00 | $68.96 |
| | 12/01/2016 | $45.64 | $10.00 | $14.55 | $0.00 | $70.19 |
| | 06/01/2017 | $46.63 | $10.00 | $14.55 | $0.00 | $71.18 |
| | 12/01/2017 | $47.62 | $10.00 | $14.55 | $0.00 | $72.17 |
| For apprentice rates see "Apprentice- OPERATING ENGINEERS" | | | | | | |
| MILLWRIGHT (Zone 1)<br>*MILLWRIGHTS LOCAL 1121 - Zone 1* | 04/01/2015 | $37.64 | $9.80 | $16.21 | $0.00 | $63.65 |

| Classification | Effective Date | Base Wage | Health | Pension | Supplemental Unemployment | Total Rate |
|---|---|---|---|---|---|---|

**Apprentice -** *MILLWRIGHT - Local 1121 Zone 1*

**Effective Date -** 04/01/2015

| Step | percent | Apprentice Base Wage | Health | Pension | Supplemental Unemployment | Total Rate |
|---|---|---|---|---|---|---|
| 1 | 55 | $20.70 | $9.80 | $4.48 | $0.00 | $34.98 |
| 2 | 65 | $24.47 | $9.80 | $13.36 | $0.00 | $47.63 |
| 3 | 75 | $28.23 | $9.80 | $14.18 | $0.00 | $52.21 |
| 4 | 85 | $31.99 | $9.80 | $14.99 | $0.00 | $56.78 |

**Notes:**

Steps are 2,000 hours

**Apprentice to Journeyworker Ratio:1:5**

| | | | | | | |
|---|---|---|---|---|---|---|
| MORTAR MIXER<br>*LABORERS - ZONE 1* | 06/01/2015 | $35.35 | $7.30 | $13.20 | $0.00 | $55.85 |
| | 12/01/2015 | $36.10 | $7.30 | $13.20 | $0.00 | $56.60 |
| | 06/01/2016 | $36.85 | $7.30 | $13.20 | $0.00 | $57.35 |
| | 12/01/2016 | $37.85 | $7.30 | $13.20 | $0.00 | $58.35 |
| For apprentice rates see "Apprentice- LABORER" | | | | | | |
| OILER (OTHER THAN TRUCK CRANES,GRADALLS)<br>*OPERATING ENGINEERS LOCAL 4* | 06/01/2015 | $21.97 | $10.00 | $14.55 | $0.00 | $46.52 |
| | 12/01/2015 | $22.62 | $10.00 | $14.55 | $0.00 | $47.17 |
| | 06/01/2016 | $23.01 | $10.00 | $14.55 | $0.00 | $47.56 |
| | 12/01/2016 | $23.66 | $10.00 | $14.55 | $0.00 | $48.21 |
| | 06/01/2017 | $24.17 | $10.00 | $14.55 | $0.00 | $48.72 |
| | 12/01/2017 | $24.69 | $10.00 | $14.55 | $0.00 | $49.24 |
| For apprentice rates see "Apprentice- OPERATING ENGINEERS" | | | | | | |
| OILER (TRUCK CRANES, GRADALLS)<br>*OPERATING ENGINEERS LOCAL 4* | 06/01/2015 | $25.68 | $10.00 | $14.55 | $0.00 | $50.23 |
| | 12/01/2015 | $26.43 | $10.00 | $14.55 | $0.00 | $50.98 |
| | 06/01/2016 | $26.89 | $10.00 | $14.55 | $0.00 | $51.44 |
| | 12/01/2016 | $27.64 | $10.00 | $14.55 | $0.00 | $52.19 |
| | 06/01/2017 | $28.24 | $10.00 | $14.55 | $0.00 | $52.79 |
| | 12/01/2017 | $28.85 | $10.00 | $14.55 | $0.00 | $53.40 |
| For apprentice rates see "Apprentice- OPERATING ENGINEERS" | | | | | | |
| OTHER POWER DRIVEN EQUIPMENT - CLASS II<br>*OPERATING ENGINEERS LOCAL 4* | 06/01/2015 | $42.42 | $10.00 | $14.55 | $0.00 | $66.97 |
| | 12/01/2015 | $43.66 | $10.00 | $14.55 | $0.00 | $68.21 |
| | 06/01/2016 | $44.41 | $10.00 | $14.55 | $0.00 | $68.96 |
| | 12/01/2016 | $45.64 | $10.00 | $14.55 | $0.00 | $70.19 |
| | 06/01/2017 | $46.63 | $10.00 | $14.55 | $0.00 | $71.18 |
| | 12/01/2017 | $47.62 | $10.00 | $14.55 | $0.00 | $72.17 |
| For apprentice rates see "Apprentice- OPERATING ENGINEERS" | | | | | | |
| PAINTER (BRIDGES/TANKS)<br>*PAINTERS LOCAL 35 - ZONE 1* | 01/01/2015 | $47.66 | $7.85 | $16.10 | $0.00 | $71.61 |
| | 07/01/2015 | $48.56 | $7.85 | $16.10 | $0.00 | $72.51 |
| | 01/01/2016 | $49.51 | $7.85 | $16.10 | $0.00 | $73.46 |
| | 07/01/2016 | $50.46 | $7.85 | $16.10 | $0.00 | $74.41 |
| | 01/01/2017 | $51.41 | $7.85 | $16.10 | $0.00 | $75.36 |

| Classification | Effective Date | Base Wage | Health | Pension | Supplemental Unemployment | Total Rate |
|---|---|---|---|---|---|---|

**Apprentice -** *PAINTER Local 35 - BRIDGES/TANKS*

**Effective Date -** 01/01/2015

| Step | percent | Apprentice Base Wage | Health | Pension | Supplemental Unemployment | Total Rate |
|---|---|---|---|---|---|---|
| 1 | 50 | $23.83 | $7.85 | $0.00 | $0.00 | $31.68 |
| 2 | 55 | $26.21 | $7.85 | $3.66 | $0.00 | $37.72 |
| 3 | 60 | $28.60 | $7.85 | $3.99 | $0.00 | $40.44 |
| 4 | 65 | $30.98 | $7.85 | $4.32 | $0.00 | $43.15 |
| 5 | 70 | $33.36 | $7.85 | $14.11 | $0.00 | $55.32 |
| 6 | 75 | $35.75 | $7.85 | $14.44 | $0.00 | $58.04 |
| 7 | 80 | $38.13 | $7.85 | $14.77 | $0.00 | $60.75 |
| 8 | 90 | $42.89 | $7.85 | $15.44 | $0.00 | $66.18 |

**Effective Date -** 07/01/2015

| Step | percent | Apprentice Base Wage | Health | Pension | Supplemental Unemployment | Total Rate |
|---|---|---|---|---|---|---|
| 1 | 50 | $24.28 | $7.85 | $0.00 | $0.00 | $32.13 |
| 2 | 55 | $26.71 | $7.85 | $3.66 | $0.00 | $38.22 |
| 3 | 60 | $29.14 | $7.85 | $3.99 | $0.00 | $40.98 |
| 4 | 65 | $31.56 | $7.85 | $4.32 | $0.00 | $43.73 |
| 5 | 70 | $33.99 | $7.85 | $14.11 | $0.00 | $55.95 |
| 6 | 75 | $36.42 | $7.85 | $14.44 | $0.00 | $58.71 |
| 7 | 80 | $38.85 | $7.85 | $14.77 | $0.00 | $61.47 |
| 8 | 90 | $43.70 | $7.85 | $15.44 | $0.00 | $66.99 |

**Notes:**

Steps are 750 hrs.

**Apprentice to Journeyworker Ratio:1:1**

| | | | | | | |
|---|---|---|---|---|---|---|
| PAINTER (SPRAY OR SANDBLAST, NEW) * | 01/01/2015 | $44.35 | $7.85 | $16.10 | $0.00 | $68.30 |
| * If 30% or more of surfaces to be painted are new construction, NEW paint rate shall be used.*PAINTERS LOCAL 35 - ZONE 1* | 07/01/2015 | $45.25 | $7.85 | $16.10 | $0.00 | $69.20 |
| | 01/01/2016 | $46.20 | $7.85 | $16.10 | $0.00 | $70.15 |
| | 07/01/2016 | $47.15 | $7.85 | $16.10 | $0.00 | $71.10 |
| | 01/01/2017 | $48.10 | $7.85 | $16.10 | $0.00 | $72.05 |

| Classification | Effective Date | Base Wage | Health | Pension | Supplemental Unemployment | Total Rate |
|---|---|---|---|---|---|---|

**Apprentice -** *PAINTER Local 35 Zone 1 - Spray/Sandblast - New*

**Effective Date -** 01/01/2015

| Step | percent | Apprentice Base Wage | Health | Pension | Supplemental Unemployment | Total Rate |
|---|---|---|---|---|---|---|
| 1 | 50 | $22.18 | $7.85 | $0.00 | $0.00 | $30.03 |
| 2 | 55 | $24.39 | $7.85 | $3.66 | $0.00 | $35.90 |
| 3 | 60 | $26.61 | $7.85 | $3.99 | $0.00 | $38.45 |
| 4 | 65 | $28.83 | $7.85 | $4.32 | $0.00 | $41.00 |
| 5 | 70 | $31.05 | $7.85 | $14.11 | $0.00 | $53.01 |
| 6 | 75 | $33.26 | $7.85 | $14.44 | $0.00 | $55.55 |
| 7 | 80 | $35.48 | $7.85 | $14.77 | $0.00 | $58.10 |
| 8 | 90 | $39.92 | $7.85 | $15.44 | $0.00 | $63.21 |

**Effective Date -** 07/01/2015

| Step | percent | Apprentice Base Wage | Health | Pension | Supplemental Unemployment | Total Rate |
|---|---|---|---|---|---|---|
| 1 | 50 | $22.63 | $7.85 | $0.00 | $0.00 | $30.48 |
| 2 | 55 | $24.89 | $7.85 | $3.66 | $0.00 | $36.40 |
| 3 | 60 | $27.15 | $7.85 | $3.99 | $0.00 | $38.99 |
| 4 | 65 | $29.41 | $7.85 | $4.32 | $0.00 | $41.58 |
| 5 | 70 | $31.68 | $7.85 | $14.11 | $0.00 | $53.64 |
| 6 | 75 | $33.94 | $7.85 | $14.44 | $0.00 | $56.23 |
| 7 | 80 | $36.20 | $7.85 | $14.77 | $0.00 | $58.82 |
| 8 | 90 | $40.73 | $7.85 | $15.44 | $0.00 | $64.02 |

**Notes:**

Steps are 750 hrs.

**Apprentice to Journeyworker Ratio:1:1**

| | | | | | | |
|---|---|---|---|---|---|---|
| PAINTER (SPRAY OR SANDBLAST, REPAINT)<br>*PAINTERS LOCAL 35 - ZONE 1* | 01/01/2015 | $42.41 | $7.85 | $16.10 | $0.00 | $66.36 |
| | 07/01/2015 | $43.31 | $7.85 | $16.10 | $0.00 | $67.26 |
| | 01/01/2016 | $44.26 | $7.85 | $16.10 | $0.00 | $68.21 |
| | 07/01/2016 | $45.21 | $7.85 | $16.10 | $0.00 | $69.16 |
| | 01/01/2017 | $46.16 | $7.85 | $16.10 | $0.00 | $70.11 |

| Classification | Effective Date | Base Wage | Health | Pension | Supplemental Unemployment | Total Rate |
|---|---|---|---|---|---|---|

**Apprentice -** *PAINTER Local 35 Zone 1 - Spray/Sandblast - Repaint*

**Effective Date -** 01/01/2015

| Step | percent | Apprentice Base Wage | Health | Pension | Supplemental Unemployment | Total Rate |
|---|---|---|---|---|---|---|
| 1 | 50 | $21.21 | $7.85 | $0.00 | $0.00 | $29.06 |
| 2 | 55 | $23.33 | $7.85 | $3.66 | $0.00 | $34.84 |
| 3 | 60 | $25.45 | $7.85 | $3.99 | $0.00 | $37.29 |
| 4 | 65 | $27.57 | $7.85 | $4.32 | $0.00 | $39.74 |
| 5 | 70 | $29.69 | $7.85 | $14.11 | $0.00 | $51.65 |
| 6 | 75 | $31.81 | $7.85 | $14.44 | $0.00 | $54.10 |
| 7 | 80 | $33.93 | $7.85 | $14.77 | $0.00 | $56.55 |
| 8 | 90 | $38.17 | $7.85 | $15.44 | $0.00 | $61.46 |

**Effective Date -** 07/01/2015

| Step | percent | Apprentice Base Wage | Health | Pension | Supplemental Unemployment | Total Rate |
|---|---|---|---|---|---|---|
| 1 | 50 | $21.66 | $7.85 | $0.00 | $0.00 | $29.51 |
| 2 | 55 | $23.82 | $7.85 | $3.66 | $0.00 | $35.33 |
| 3 | 60 | $25.99 | $7.85 | $3.99 | $0.00 | $37.83 |
| 4 | 65 | $28.15 | $7.85 | $4.32 | $0.00 | $40.32 |
| 5 | 70 | $30.32 | $7.85 | $14.11 | $0.00 | $52.28 |
| 6 | 75 | $32.48 | $7.85 | $14.44 | $0.00 | $54.77 |
| 7 | 80 | $34.65 | $7.85 | $14.77 | $0.00 | $57.27 |
| 8 | 90 | $38.98 | $7.85 | $15.44 | $0.00 | $62.27 |

**Notes:**

Steps are 750 hrs.

**Apprentice to Journeyworker Ratio:1:1**

| | | | | | | |
|---|---|---|---|---|---|---|
| PAINTER (TRAFFIC MARKINGS)<br>*LABORERS - ZONE 1* | 06/01/2015 | $35.10 | $7.30 | $13.20 | $0.00 | $55.60 |
| | 12/01/2015 | $35.85 | $7.30 | $13.20 | $0.00 | $56.35 |
| | 06/01/2016 | $36.60 | $7.30 | $13.20 | $0.00 | $57.10 |
| | 12/01/2016 | $37.60 | $7.30 | $13.20 | $0.00 | $58.10 |
| For Apprentice rates see "Apprentice- LABORER" | | | | | | |
| PAINTER / TAPER (BRUSH, NEW) *<br>* If 30% or more of surfaces to be painted are new construction, NEW paint rate shall be used.*PAINTERS LOCAL 35 - ZONE 1* | 01/01/2015 | $42.95 | $7.85 | $16.10 | $0.00 | $66.90 |
| | 07/01/2015 | $43.85 | $7.85 | $16.10 | $0.00 | $67.80 |
| | 01/01/2016 | $44.80 | $7.85 | $16.10 | $0.00 | $68.75 |
| | 07/01/2016 | $45.75 | $7.85 | $16.10 | $0.00 | $69.70 |
| | 01/01/2017 | $46.70 | $7.85 | $16.10 | $0.00 | $70.65 |

| Classification | Effective Date | Base Wage | Health | Pension | Supplemental Unemployment | Total Rate |
|---|---|---|---|---|---|---|

**Apprentice -** *PAINTER - Local 35 Zone 1 - BRUSH NEW*

**Effective Date -** 01/01/2015

| Step | percent | Apprentice Base Wage | Health | Pension | Supplemental Unemployment | Total Rate |
|---|---|---|---|---|---|---|
| 1 | 50 | $21.48 | $7.85 | $0.00 | $0.00 | $29.33 |
| 2 | 55 | $23.62 | $7.85 | $3.66 | $0.00 | $35.13 |
| 3 | 60 | $25.77 | $7.85 | $3.99 | $0.00 | $37.61 |
| 4 | 65 | $27.92 | $7.85 | $4.32 | $0.00 | $40.09 |
| 5 | 70 | $30.07 | $7.85 | $14.11 | $0.00 | $52.03 |
| 6 | 75 | $32.21 | $7.85 | $14.44 | $0.00 | $54.50 |
| 7 | 80 | $34.36 | $7.85 | $14.77 | $0.00 | $56.98 |
| 8 | 90 | $38.66 | $7.85 | $15.44 | $0.00 | $61.95 |

**Effective Date -** 07/01/2015

| Step | percent | Apprentice Base Wage | Health | Pension | Supplemental Unemployment | Total Rate |
|---|---|---|---|---|---|---|
| 1 | 50 | $21.93 | $7.85 | $0.00 | $0.00 | $29.78 |
| 2 | 55 | $24.12 | $7.85 | $3.66 | $0.00 | $35.63 |
| 3 | 60 | $26.31 | $7.85 | $3.99 | $0.00 | $38.15 |
| 4 | 65 | $28.50 | $7.85 | $4.32 | $0.00 | $40.67 |
| 5 | 70 | $30.70 | $7.85 | $14.11 | $0.00 | $52.66 |
| 6 | 75 | $32.89 | $7.85 | $14.44 | $0.00 | $55.18 |
| 7 | 80 | $35.08 | $7.85 | $14.77 | $0.00 | $57.70 |
| 8 | 90 | $39.47 | $7.85 | $15.44 | $0.00 | $62.76 |

**Notes:**

Steps are 750 hrs.

**Apprentice to Journeyworker Ratio:1:1**

| | | | | | | |
|---|---|---|---|---|---|---|
| PAINTER / TAPER (BRUSH, REPAINT)<br>*PAINTERS LOCAL 35 - ZONE 1* | 01/01/2015 | $41.01 | $7.85 | $16.10 | $0.00 | $64.96 |
| | 07/01/2015 | $41.91 | $7.85 | $16.10 | $0.00 | $65.86 |
| | 01/01/2016 | $42.86 | $7.85 | $16.10 | $0.00 | $66.81 |
| | 07/01/2016 | $43.81 | $7.85 | $16.10 | $0.00 | $67.76 |
| | 01/01/2017 | $44.76 | $7.85 | $16.10 | $0.00 | $68.71 |

| Classification | Effective Date | Base Wage | Health | Pension | Supplemental Unemployment | Total Rate |
|---|---|---|---|---|---|---|

**Apprentice -** *PAINTER Local 35 Zone 1 - BRUSH REPAINT*

**Effective Date -** 01/01/2015

| Step | percent | Apprentice Base Wage | Health | Pension | Supplemental Unemployment | Total Rate |
|---|---|---|---|---|---|---|
| 1 | 50 | $20.51 | $7.85 | $0.00 | $0.00 | $28.36 |
| 2 | 55 | $22.56 | $7.85 | $3.66 | $0.00 | $34.07 |
| 3 | 60 | $24.61 | $7.85 | $3.99 | $0.00 | $36.45 |
| 4 | 65 | $26.66 | $7.85 | $4.32 | $0.00 | $38.83 |
| 5 | 70 | $28.71 | $7.85 | $14.11 | $0.00 | $50.67 |
| 6 | 75 | $30.76 | $7.85 | $14.44 | $0.00 | $53.05 |
| 7 | 80 | $32.81 | $7.85 | $14.77 | $0.00 | $55.43 |
| 8 | 90 | $36.91 | $7.85 | $15.44 | $0.00 | $60.20 |

**Effective Date -** 07/01/2015

| Step | percent | Apprentice Base Wage | Health | Pension | Supplemental Unemployment | Total Rate |
|---|---|---|---|---|---|---|
| 1 | 50 | $20.96 | $7.85 | $0.00 | $0.00 | $28.81 |
| 2 | 55 | $23.05 | $7.85 | $3.66 | $0.00 | $34.56 |
| 3 | 60 | $25.15 | $7.85 | $3.99 | $0.00 | $36.99 |
| 4 | 65 | $27.24 | $7.85 | $4.32 | $0.00 | $39.41 |
| 5 | 70 | $29.34 | $7.85 | $14.11 | $0.00 | $51.30 |
| 6 | 75 | $31.43 | $7.85 | $14.44 | $0.00 | $53.72 |
| 7 | 80 | $33.53 | $7.85 | $14.77 | $0.00 | $56.15 |
| 8 | 90 | $37.72 | $7.85 | $15.44 | $0.00 | $61.01 |

**Notes:**

Steps are 750 hrs.

**Apprentice to Journeyworker Ratio:1:1**

| | | | | | | |
|---|---|---|---|---|---|---|
| PANEL & PICKUP TRUCKS DRIVER<br>*TEAMSTERS JOINT COUNCIL NO. 10 ZONE A* | 06/01/2015 | $32.58 | $9.91 | $9.33 | $0.00 | $51.82 |
| | 08/01/2015 | $32.58 | $10.41 | $9.33 | $0.00 | $52.32 |
| | 12/01/2015 | $32.58 | $10.41 | $10.08 | $0.00 | $53.07 |
| | 06/01/2016 | $33.08 | $10.41 | $10.08 | $0.00 | $53.57 |
| | 08/01/2016 | $33.08 | $10.91 | $10.08 | $0.00 | $54.07 |
| | 12/01/2016 | $33.08 | $10.91 | $10.89 | $0.00 | $54.88 |
| PIER AND DOCK CONSTRUCTOR (UNDERPINNING AND DECK)<br>*PILE DRIVER LOCAL 56 (ZONE 1)* | 08/01/2014 | $41.60 | $9.80 | $18.17 | $0.00 | $69.57 |
| | 08/01/2015 | $43.10 | $9.80 | $18.17 | $0.00 | $71.07 |
| PILE DRIVER<br>*PILE DRIVER LOCAL 56 (ZONE 1)* | 08/01/2014 | $41.60 | $9.80 | $18.17 | $0.00 | $69.57 |
| | 08/01/2015 | $43.10 | $9.80 | $18.17 | $0.00 | $71.07 |

| Classification | Effective Date | Base Wage | Health | Pension | Supplemental Unemployment | Total Rate |
|---|---|---|---|---|---|---|

**Apprentice -** *PILE DRIVER - Local 56 Zone 1*

**Effective Date -** 08/01/2014

| Step | percent | Apprentice Base Wage | Health | Pension | Supplemental Unemployment | Total Rate |
|---|---|---|---|---|---|---|
| 1 | 50 | $20.80 | $9.80 | $18.17 | $0.00 | $48.77 |
| 2 | 60 | $24.96 | $9.80 | $18.17 | $0.00 | $52.93 |
| 3 | 70 | $29.12 | $9.80 | $18.17 | $0.00 | $57.09 |
| 4 | 75 | $31.20 | $9.80 | $18.17 | $0.00 | $59.17 |
| 5 | 80 | $33.28 | $9.80 | $18.17 | $0.00 | $61.25 |
| 6 | 80 | $33.28 | $9.80 | $18.17 | $0.00 | $61.25 |
| 7 | 90 | $37.44 | $9.80 | $18.17 | $0.00 | $65.41 |
| 8 | 90 | $37.44 | $9.80 | $18.17 | $0.00 | $65.41 |

**Effective Date -** 08/01/2015

| Step | percent | Apprentice Base Wage | Health | Pension | Supplemental Unemployment | Total Rate |
|---|---|---|---|---|---|---|
| 1 | 50 | $21.55 | $9.80 | $18.17 | $0.00 | $49.52 |
| 2 | 60 | $25.86 | $9.80 | $18.17 | $0.00 | $53.83 |
| 3 | 70 | $30.17 | $9.80 | $18.17 | $0.00 | $58.14 |
| 4 | 75 | $32.33 | $9.80 | $18.17 | $0.00 | $60.30 |
| 5 | 80 | $34.48 | $9.80 | $18.17 | $0.00 | $62.45 |
| 6 | 80 | $34.48 | $9.80 | $18.17 | $0.00 | $62.45 |
| 7 | 90 | $38.79 | $9.80 | $18.17 | $0.00 | $66.76 |
| 8 | 90 | $38.79 | $9.80 | $18.17 | $0.00 | $66.76 |

**Notes:**

**Apprentice to Journeyworker Ratio:1:3**

| | | | | | | |
|---|---|---|---|---|---|---|
| PIPEFITTER & STEAMFITTER<br>*PIPEFITTERS LOCAL 537* | 03/01/2015 | $48.69 | $9.70 | $16.89 | $0.00 | $75.28 |
| | 09/01/2015 | $49.69 | $9.70 | $16.89 | $0.00 | $76.28 |
| | 03/01/2016 | $50.69 | $9.70 | $16.89 | $0.00 | $77.28 |
| | 09/01/2016 | $51.69 | $9.70 | $16.89 | $0.00 | $78.28 |
| | 03/01/2017 | $52.69 | $9.70 | $16.89 | $0.00 | $79.28 |

| Classification | Effective Date | Base Wage | Health | Pension | Supplemental Unemployment | Total Rate |
|---|---|---|---|---|---|---|

**Apprentice -** *PIPEFITTER - Local 537*

**Effective Date -** 03/01/2015

| Step | percent | Apprentice Base Wage | Health | Pension | Supplemental Unemployment | Total Rate |
|---|---|---|---|---|---|---|
| 1 | 40 | $19.48 | $9.70 | $7.50 | $0.00 | $36.68 |
| 2 | 45 | $21.91 | $9.70 | $16.89 | $0.00 | $48.50 |
| 3 | 60 | $29.21 | $9.70 | $16.89 | $0.00 | $55.80 |
| 4 | 70 | $34.08 | $9.70 | $16.89 | $0.00 | $60.67 |
| 5 | 80 | $38.95 | $9.70 | $16.89 | $0.00 | $65.54 |

**Effective Date -** 09/01/2015

| Step | percent | Apprentice Base Wage | Health | Pension | Supplemental Unemployment | Total Rate |
|---|---|---|---|---|---|---|
| 1 | 40 | $19.88 | $9.70 | $7.50 | $0.00 | $37.08 |
| 2 | 45 | $22.36 | $9.70 | $16.89 | $0.00 | $48.95 |
| 3 | 60 | $29.81 | $9.70 | $16.89 | $0.00 | $56.40 |
| 4 | 70 | $34.78 | $9.70 | $16.89 | $0.00 | $61.37 |
| 5 | 80 | $39.75 | $9.70 | $16.89 | $0.00 | $66.34 |

**Notes:**

** 1:3; 3:15; 1:10 thereafter / Steps are 1 yr.
Refrig/AC Mechanic **1:1;1:2;2:4;3:6;4:8;5:10;6:12;7:14;8:17;9:20;10:23(Max)

**Apprentice to Journeyworker Ratio:****

| | | | | | | |
|---|---|---|---|---|---|---|
| PIPELAYER<br>*LABORERS - ZONE 1* | 06/01/2015 | $35.35 | $7.30 | $13.20 | $0.00 | $55.85 |
| | 12/01/2015 | $36.10 | $7.30 | $13.20 | $0.00 | $56.60 |
| | 06/01/2016 | $36.85 | $7.30 | $13.20 | $0.00 | $57.35 |
| | 12/01/2016 | $37.85 | $7.30 | $13.20 | $0.00 | $58.35 |
| For apprentice rates see "Apprentice- LABORER" | | | | | | |
| PLUMBERS & GASFITTERS<br>*PLUMBERS & GASFITTERS LOCAL 12* | 03/01/2015 | $50.21 | $10.32 | $14.89 | $0.00 | $75.42 |
| | 09/01/2015 | $51.21 | $10.32 | $14.89 | $0.00 | $76.42 |
| | 03/01/2016 | $52.36 | $10.32 | $14.89 | $0.00 | $77.57 |
| | 09/01/2016 | $53.41 | $10.32 | $14.89 | $0.00 | $78.62 |
| | 03/01/2017 | $54.41 | $10.32 | $14.89 | $0.00 | $79.62 |

| Classification | Effective Date | Base Wage | Health | Pension | Supplemental Unemployment | Total Rate |
|---|---|---|---|---|---|---|

**Apprentice -** *PLUMBER/GASFITTER - Local 12*

**Effective Date -** 03/01/2015

| Step | percent | Apprentice Base Wage | Health | Pension | Supplemental Unemployment | Total Rate |
|---|---|---|---|---|---|---|
| 1 | 35 | $17.57 | $10.32 | $5.54 | $0.00 | $33.43 |
| 2 | 40 | $20.08 | $10.32 | $6.27 | $0.00 | $36.67 |
| 3 | 55 | $27.62 | $10.32 | $8.42 | $0.00 | $46.36 |
| 4 | 65 | $32.64 | $10.32 | $9.87 | $0.00 | $52.83 |
| 5 | 75 | $37.66 | $10.32 | $11.30 | $0.00 | $59.28 |

**Effective Date -** 09/01/2015

| Step | percent | Apprentice Base Wage | Health | Pension | Supplemental Unemployment | Total Rate |
|---|---|---|---|---|---|---|
| 1 | 35 | $17.92 | $10.32 | $5.54 | $0.00 | $33.78 |
| 2 | 40 | $20.48 | $10.32 | $6.27 | $0.00 | $37.07 |
| 3 | 55 | $28.17 | $10.32 | $8.42 | $0.00 | $46.91 |
| 4 | 65 | $33.29 | $10.32 | $9.87 | $0.00 | $53.48 |
| 5 | 75 | $38.41 | $10.32 | $11.30 | $0.00 | $60.03 |

**Notes:**

** 1:2; 2:6; 3:10; 4:14; 5:19/Steps are 1 yr
Step4 with lic$56.05 Step5 with lic$62.48

**Apprentice to Journeyworker Ratio:****

| | | | | | | |
|---|---|---|---|---|---|---|
| PNEUMATIC CONTROLS (TEMP.)<br>*PIPEFITTERS LOCAL 537* | 03/01/2015 | $48.69 | $9.70 | $16.89 | $0.00 | $75.28 |
| | 09/01/2015 | $49.69 | $9.70 | $16.89 | $0.00 | $76.28 |
| | 03/01/2016 | $50.69 | $9.70 | $16.89 | $0.00 | $77.28 |
| | 09/01/2016 | $51.69 | $9.70 | $16.89 | $0.00 | $78.28 |
| | 03/01/2017 | $52.69 | $9.70 | $16.89 | $0.00 | $79.28 |
| For apprentice rates see "Apprentice- PIPEFITTER" or "PLUMBER/PIPEFITTER" | | | | | | |
| PNEUMATIC DRILL/TOOL OPERATOR<br>*LABORERS - ZONE 1* | 06/01/2015 | $35.35 | $7.30 | $13.20 | $0.00 | $55.85 |
| | 12/01/2015 | $36.10 | $7.30 | $13.20 | $0.00 | $56.60 |
| | 06/01/2016 | $36.85 | $7.30 | $13.20 | $0.00 | $57.35 |
| | 12/01/2016 | $37.85 | $7.30 | $13.20 | $0.00 | $58.35 |
| For apprentice rates see "Apprentice- LABORER" | | | | | | |
| POWDERMAN & BLASTER<br>*LABORERS - ZONE 1* | 06/01/2015 | $36.10 | $7.30 | $13.20 | $0.00 | $56.60 |
| | 12/01/2015 | $36.85 | $7.30 | $13.20 | $0.00 | $57.35 |
| | 06/01/2016 | $37.60 | $7.30 | $13.20 | $0.00 | $58.10 |
| | 12/01/2016 | $38.60 | $7.30 | $13.20 | $0.00 | $59.10 |
| For apprentice rates see "Apprentice- LABORER" | | | | | | |
| POWER SHOVEL/DERRICK/TRENCHING MACHINE<br>*OPERATING ENGINEERS LOCAL 4* | 06/01/2015 | $42.83 | $10.00 | $14.55 | $0.00 | $67.38 |
| | 12/01/2015 | $44.08 | $10.00 | $14.55 | $0.00 | $68.63 |
| | 06/01/2016 | $44.83 | $10.00 | $14.55 | $0.00 | $69.38 |
| | 12/01/2016 | $46.08 | $10.00 | $14.55 | $0.00 | $70.63 |
| | 06/01/2017 | $47.08 | $10.00 | $14.55 | $0.00 | $71.63 |
| | 12/01/2017 | $48.08 | $10.00 | $14.55 | $0.00 | $72.63 |
| For apprentice rates see "Apprentice- OPERATING ENGINEERS" | | | | | | |

| Classification | Effective Date | Base Wage | Health | Pension | Supplemental Unemployment | Total Rate |
|---|---|---|---|---|---|---|
| PUMP OPERATOR (CONCRETE) *OPERATING ENGINEERS LOCAL 4* | 06/01/2015 | $42.83 | $10.00 | $14.55 | $0.00 | $67.38 |
| | 12/01/2015 | $44.08 | $10.00 | $14.55 | $0.00 | $68.63 |
| | 06/01/2016 | $44.83 | $10.00 | $14.55 | $0.00 | $69.38 |
| | 12/01/2016 | $46.08 | $10.00 | $14.55 | $0.00 | $70.63 |
| | 06/01/2017 | $47.08 | $10.00 | $14.55 | $0.00 | $71.63 |
| | 12/01/2017 | $48.08 | $10.00 | $14.55 | $0.00 | $72.63 |
| For apprentice rates see "Apprentice- OPERATING ENGINEERS" | | | | | | |
| PUMP OPERATOR (DEWATERING, OTHER) *OPERATING ENGINEERS LOCAL 4* | 06/01/2015 | $29.61 | $10.00 | $14.55 | $0.00 | $54.16 |
| | 12/01/2015 | $30.48 | $10.00 | $14.55 | $0.00 | $55.03 |
| | 06/01/2016 | $31.00 | $10.00 | $14.55 | $0.00 | $55.55 |
| | 12/01/2016 | $31.87 | $10.00 | $14.55 | $0.00 | $56.42 |
| | 06/01/2017 | $32.56 | $10.00 | $14.55 | $0.00 | $57.11 |
| | 12/01/2017 | $33.25 | $10.00 | $14.55 | $0.00 | $57.80 |
| For apprentice rates see "Apprentice- OPERATING ENGINEERS" | | | | | | |
| READY MIX CONCRETE DRIVERS after 4/30/10 (Drivers Hired After 4/30/2010) *TEAMSTERS LOCAL 25a* | 05/01/2015 | $27.88 | $7.73 | $8.92 | $0.00 | $44.53 |
| | 07/01/2015 | $27.88 | $7.98 | $8.92 | $0.00 | $44.78 |
| | 05/01/2016 | $28.03 | $7.98 | $9.31 | $0.00 | $45.32 |
| | 07/01/2016 | $28.03 | $8.23 | $9.31 | $0.00 | $45.57 |
| | 05/01/2017 | $28.18 | $8.23 | $9.72 | $0.00 | $46.13 |
| | 07/01/2017 | $28.18 | $8.48 | $9.72 | $0.00 | $46.38 |
| READY-MIX CONCRETE DRIVER *TEAMSTERS LOCAL 25a* | 05/01/2015 | $31.14 | $7.73 | $8.92 | $0.00 | $47.79 |
| | 07/01/2015 | $31.14 | $7.98 | $8.92 | $0.00 | $48.04 |
| | 05/01/2016 | $31.29 | $7.98 | $9.31 | $0.00 | $48.58 |
| | 07/01/2016 | $31.29 | $8.23 | $9.31 | $0.00 | $48.83 |
| | 05/01/2017 | $31.44 | $8.23 | $9.72 | $0.00 | $49.39 |
| | 07/01/2017 | $31.44 | $8.48 | $9.72 | $0.00 | $49.64 |
| RECLAIMERS *OPERATING ENGINEERS LOCAL 4* | 06/01/2015 | $42.42 | $10.00 | $14.55 | $0.00 | $66.97 |
| | 12/01/2015 | $43.66 | $10.00 | $14.55 | $0.00 | $68.21 |
| | 06/01/2016 | $44.41 | $10.00 | $14.55 | $0.00 | $68.96 |
| | 12/01/2016 | $45.64 | $10.00 | $14.55 | $0.00 | $70.19 |
| | 06/01/2017 | $46.63 | $10.00 | $14.55 | $0.00 | $71.18 |
| | 12/01/2017 | $47.62 | $10.00 | $14.55 | $0.00 | $72.17 |
| For apprentice rates see "Apprentice- OPERATING ENGINEERS" | | | | | | |
| RESIDENTIAL WOOD FRAME (All Other Work) *CARPENTERS -ZONE 1 (Residential Wood)* | 04/01/2011 | $37.25 | $8.67 | $15.51 | $0.00 | $61.43 |
| RESIDENTIAL WOOD FRAME CARPENTER ** ** The Residential Wood Frame Carpenter classification applies only to the construction of new, wood frame residences that do not exceed four stories including the basement. *CARPENTERS -ZONE 1 (Residential Wood)* | 05/01/2011 | $27.49 | $6.34 | $6.23 | $0.00 | $40.06 |

As of 9/1/09 Carpentry work on wood-frame residential WEATHERIZATION projects shall be paid the RESIDENTIAL WOOD FRAME CARPENTER rate.

| Classification | Effective Date | Base Wage | Health | Pension | Supplemental Unemployment | Total Rate |
|---|---|---|---|---|---|---|

**Apprentice -** *CARPENTER (Residential Wood Frame) - Zone 1*

**Effective Date -** 05/01/2011

| Step | percent | Apprentice Base Wage | Health | Pension | Supplemental Unemployment | Total Rate |
|---|---|---|---|---|---|---|
| 1 | 60 | $16.49 | $6.34 | $0.00 | $0.00 | $22.83 |
| 2 | 60 | $16.49 | $6.34 | $6.23 | $0.00 | $29.06 |
| 3 | 65 | $17.87 | $6.34 | $6.23 | $0.00 | $30.44 |
| 4 | 70 | $19.24 | $6.34 | $6.23 | $0.00 | $31.81 |
| 5 | 75 | $20.62 | $6.34 | $6.23 | $0.00 | $33.19 |
| 6 | 80 | $21.99 | $6.34 | $6.23 | $0.00 | $34.56 |
| 7 | 85 | $23.37 | $6.34 | $6.23 | $0.00 | $35.94 |
| 8 | 90 | $24.74 | $6.34 | $6.23 | $0.00 | $37.31 |

**Notes:**

**Apprentice to Journeyworker Ratio:1:5**

| | | | | | | |
|---|---|---|---|---|---|---|
| RIDE-ON MOTORIZED BUGGY OPERATOR<br>*LABORERS - ZONE 1* | 06/01/2015 | $35.35 | $7.30 | $13.20 | $0.00 | $55.85 |
| | 12/01/2015 | $36.10 | $7.30 | $13.20 | $0.00 | $56.60 |
| | 06/01/2016 | $36.85 | $7.30 | $13.20 | $0.00 | $57.35 |
| | 12/01/2016 | $37.85 | $7.30 | $13.20 | $0.00 | $58.35 |
| For apprentice rates see "Apprentice- LABORER" | | | | | | |
| ROLLER/SPREADER/MULCHING MACHINE<br>*OPERATING ENGINEERS LOCAL 4* | 06/01/2015 | $42.42 | $10.00 | $14.55 | $0.00 | $66.97 |
| | 12/01/2015 | $43.66 | $10.00 | $14.55 | $0.00 | $68.21 |
| | 06/01/2016 | $44.41 | $10.00 | $14.55 | $0.00 | $68.96 |
| | 12/01/2016 | $45.64 | $10.00 | $14.55 | $0.00 | $70.19 |
| | 06/01/2017 | $46.63 | $10.00 | $14.55 | $0.00 | $71.18 |
| | 12/01/2017 | $47.62 | $10.00 | $14.55 | $0.00 | $72.17 |
| For apprentice rates see "Apprentice- OPERATING ENGINEERS" | | | | | | |
| ROOFER (Inc.Roofer Waterproofng &Roofer Damproofg)<br>*ROOFERS LOCAL 33* | 02/01/2015 | $40.11 | $10.50 | $11.60 | $0.00 | $62.21 |
| | 08/01/2015 | $41.01 | $10.50 | $11.60 | $0.00 | $63.11 |
| | 02/01/2016 | $41.91 | $10.50 | $11.60 | $0.00 | $64.01 |

| Classification | Effective Date | Base Wage | Health | Pension | Supplemental Unemployment | Total Rate |
|---|---|---|---|---|---|---|

**Apprentice -** *ROOFER - Local 33*

**Effective Date -** 02/01/2015

| Step | percent | Apprentice Base Wage | Health | Pension | Supplemental Unemployment | Total Rate |
|---|---|---|---|---|---|---|
| 1 | 50 | $20.06 | $10.50 | $3.38 | $0.00 | $33.94 |
| 2 | 60 | $24.07 | $10.50 | $11.60 | $0.00 | $46.17 |
| 3 | 65 | $26.07 | $10.50 | $11.60 | $0.00 | $48.17 |
| 4 | 75 | $30.08 | $10.50 | $11.60 | $0.00 | $52.18 |
| 5 | 85 | $34.09 | $10.50 | $11.60 | $0.00 | $56.19 |

**Effective Date -** 08/01/2015

| Step | percent | Apprentice Base Wage | Health | Pension | Supplemental Unemployment | Total Rate |
|---|---|---|---|---|---|---|
| 1 | 50 | $20.51 | $10.50 | $3.38 | $0.00 | $34.39 |
| 2 | 60 | $24.61 | $10.50 | $11.60 | $0.00 | $46.71 |
| 3 | 65 | $26.66 | $10.50 | $11.60 | $0.00 | $48.76 |
| 4 | 75 | $30.76 | $10.50 | $11.60 | $0.00 | $52.86 |
| 5 | 85 | $34.86 | $10.50 | $11.60 | $0.00 | $56.96 |

**Notes:** ** 1:5, 2:6-10, the 1:10; Reroofing: 1:4, then 1:1
Step 1 is 2000 hrs.; Steps 2-5 are 1000 hrs.

**Apprentice to Journeyworker Ratio:****

| | | | | | | |
|---|---|---|---|---|---|---|
| ROOFER SLATE / TILE / PRECAST CONCRETE<br>*ROOFERS LOCAL 33* | 02/01/2015 | $40.36 | $10.50 | $11.60 | $0.00 | $62.46 |
| | 08/01/2015 | $41.26 | $10.50 | $11.60 | $0.00 | $63.36 |
| | 02/01/2016 | $42.16 | $10.50 | $11.60 | $0.00 | $64.26 |
| For apprentice rates see "Apprentice- ROOFER" | | | | | | |
| SHEETMETAL WORKER<br>*SHEETMETAL WORKERS LOCAL 17 - A* | 02/01/2015 | $43.28 | $10.20 | $20.54 | $2.22 | $76.24 |
| | 08/01/2015 | $44.28 | $10.20 | $20.54 | $2.22 | $77.24 |
| | 02/01/2016 | $45.28 | $10.20 | $20.54 | $2.22 | $78.24 |
| | 08/01/2016 | $46.43 | $10.20 | $20.54 | $2.22 | $79.39 |
| | 02/01/2017 | $47.53 | $10.20 | $20.54 | $2.22 | $80.49 |
| | 08/01/2017 | $48.63 | $10.20 | $20.54 | $2.22 | $81.59 |
| | 02/01/2018 | $49.78 | $10.20 | $20.54 | $2.22 | $82.74 |

| Classification | Effective Date | Base Wage | Health | Pension | Supplemental Unemployment | Total Rate |
|---|---|---|---|---|---|---|

**Apprentice -** *SHEET METAL WORKER - Local 17-A*

**Effective Date -** 02/01/2015

| Step | percent | Apprentice Base Wage | Health | Pension | Supplemental Unemployment | Total Rate |
|---|---|---|---|---|---|---|
| 1 | 40 | $17.31 | $10.20 | $4.58 | $0.00 | $32.09 |
| 2 | 40 | $17.31 | $10.20 | $4.58 | $0.00 | $32.09 |
| 3 | 45 | $19.48 | $10.20 | $9.09 | $1.16 | $39.93 |
| 4 | 45 | $19.48 | $10.20 | $9.09 | $1.16 | $39.93 |
| 5 | 50 | $21.64 | $10.20 | $9.91 | $1.25 | $43.00 |
| 6 | 50 | $21.64 | $10.20 | $10.16 | $1.26 | $43.26 |
| 7 | 60 | $25.97 | $10.20 | $11.55 | $1.43 | $49.15 |
| 8 | 65 | $28.13 | $10.20 | $12.38 | $1.52 | $52.23 |
| 9 | 75 | $32.46 | $10.20 | $14.02 | $1.70 | $58.38 |
| 10 | 85 | $36.79 | $10.20 | $15.16 | $1.86 | $64.01 |

**Effective Date -** 08/01/2015

| Step | percent | Apprentice Base Wage | Health | Pension | Supplemental Unemployment | Total Rate |
|---|---|---|---|---|---|---|
| 1 | 40 | $17.71 | $10.20 | $4.58 | $0.00 | $32.49 |
| 2 | 40 | $17.71 | $10.20 | $4.58 | $0.00 | $32.49 |
| 3 | 45 | $19.93 | $10.20 | $9.09 | $1.18 | $40.40 |
| 4 | 45 | $19.93 | $10.20 | $9.09 | $1.18 | $40.40 |
| 5 | 50 | $22.14 | $10.20 | $9.91 | $1.27 | $43.52 |
| 6 | 50 | $22.14 | $10.20 | $10.16 | $1.28 | $43.78 |
| 7 | 60 | $26.57 | $10.20 | $11.55 | $1.45 | $49.77 |
| 8 | 65 | $28.78 | $10.20 | $12.38 | $1.54 | $52.90 |
| 9 | 75 | $33.21 | $10.20 | $14.02 | $1.72 | $59.15 |
| 10 | 85 | $37.64 | $10.20 | $15.16 | $1.89 | $64.89 |

**Notes:**

Steps are 6 mos.

**Apprentice to Journeyworker Ratio:1:4**

| | | | | | | |
|---|---|---|---|---|---|---|
| SIGN ERECTOR<br>*PAINTERS LOCAL 35 - ZONE 1* | 06/01/2013 | $25.81 | $7.07 | $7.05 | $0.00 | $39.93 |

| Classification | Effective Date | Base Wage | Health | Pension | Supplemental Unemployment | Total Rate |
|---|---|---|---|---|---|---|

**Apprentice -** *SIGN ERECTOR - Local 35 Zone 1*

**Effective Date -** 06/01/2013

| Step | percent | Apprentice Base Wage | Health | Pension | Supplemental Unemployment | Total Rate |
|---|---|---|---|---|---|---|
| 1 | 50 | $12.91 | $7.07 | $0.00 | $0.00 | $19.98 |
| 2 | 55 | $14.20 | $7.07 | $2.45 | $0.00 | $23.72 |
| 3 | 60 | $15.49 | $7.07 | $2.45 | $0.00 | $25.01 |
| 4 | 65 | $16.78 | $7.07 | $2.45 | $0.00 | $26.30 |
| 5 | 70 | $18.07 | $7.07 | $7.05 | $0.00 | $32.19 |
| 6 | 75 | $19.36 | $7.07 | $7.05 | $0.00 | $33.48 |
| 7 | 80 | $20.65 | $7.07 | $7.05 | $0.00 | $34.77 |
| 8 | 85 | $21.94 | $7.07 | $7.05 | $0.00 | $36.06 |
| 9 | 90 | $23.23 | $7.07 | $7.05 | $0.00 | $37.35 |

**Notes:**

Steps are 4 mos.

**Apprentice to Journeyworker Ratio:1:1**

| | | | | | | |
|---|---|---|---|---|---|---|
| SPECIALIZED EARTH MOVING EQUIP < 35 TONS<br>*TEAMSTERS JOINT COUNCIL NO. 10 ZONE A* | 06/01/2015 | $33.04 | $9.91 | $9.33 | $0.00 | $52.28 |
| | 08/01/2015 | $33.04 | $10.41 | $9.33 | $0.00 | $52.78 |
| | 12/01/2015 | $33.04 | $10.41 | $10.08 | $0.00 | $53.53 |
| | 06/01/2016 | $33.54 | $10.41 | $10.08 | $0.00 | $54.03 |
| | 08/01/2016 | $33.54 | $10.91 | $10.08 | $0.00 | $54.53 |
| | 12/01/2016 | $33.54 | $10.91 | $10.89 | $0.00 | $55.34 |
| SPECIALIZED EARTH MOVING EQUIP > 35 TONS<br>*TEAMSTERS JOINT COUNCIL NO. 10 ZONE A* | 06/01/2015 | $33.33 | $9.91 | $9.33 | $0.00 | $52.57 |
| | 08/01/2015 | $33.33 | $10.41 | $9.33 | $0.00 | $53.07 |
| | 12/01/2015 | $33.33 | $10.41 | $10.08 | $0.00 | $53.82 |
| | 06/01/2016 | $33.83 | $10.41 | $10.08 | $0.00 | $54.32 |
| | 08/01/2016 | $33.83 | $10.91 | $10.08 | $0.00 | $54.82 |
| | 12/01/2016 | $33.83 | $10.91 | $10.89 | $0.00 | $55.63 |
| SPRINKLER FITTER<br>*SPRINKLER FITTERS LOCAL 550 - (Section A) Zone 1* | 03/01/2015 | $54.43 | $8.42 | $14.90 | $0.00 | $77.75 |
| | 10/01/2015 | $55.58 | $8.42 | $14.90 | $0.00 | $78.90 |
| | 01/01/2016 | $55.58 | $8.67 | $15.05 | $0.00 | $79.30 |
| | 03/01/2016 | $56.58 | $8.67 | $15.05 | $0.00 | $80.30 |
| | 10/01/2016 | $57.73 | $8.67 | $15.05 | $0.00 | $81.45 |
| | 03/01/2017 | $58.73 | $8.67 | $15.05 | $0.00 | $82.45 |

| Classification | Effective Date | Base Wage | Health | Pension | Supplemental Unemployment | Total Rate |
|---|---|---|---|---|---|---|

**Apprentice -** *SPRINKLER FITTER - Local 550 (Section A) Zone 1*

**Effective Date -** 03/01/2015

| Step | percent | Apprentice Base Wage | Health | Pension | Supplemental Unemployment | Total Rate |
|---|---|---|---|---|---|---|
| 1 | 35 | $19.05 | $8.42 | $8.40 | $0.00 | $35.87 |
| 2 | 40 | $21.77 | $8.42 | $8.40 | $0.00 | $38.59 |
| 3 | 45 | $24.49 | $8.42 | $8.40 | $0.00 | $41.31 |
| 4 | 50 | $27.22 | $8.42 | $8.40 | $0.00 | $44.04 |
| 5 | 55 | $29.94 | $8.42 | $8.40 | $0.00 | $46.76 |
| 6 | 60 | $32.66 | $8.42 | $8.40 | $0.00 | $49.48 |
| 7 | 65 | $35.38 | $8.42 | $8.40 | $0.00 | $52.20 |
| 8 | 70 | $38.10 | $8.42 | $8.40 | $0.00 | $54.92 |
| 9 | 75 | $40.82 | $8.42 | $8.40 | $0.00 | $57.64 |
| 10 | 80 | $43.54 | $8.42 | $8.40 | $0.00 | $60.36 |

**Effective Date -** 10/01/2015

| Step | percent | Apprentice Base Wage | Health | Pension | Supplemental Unemployment | Total Rate |
|---|---|---|---|---|---|---|
| 1 | 35 | $19.45 | $8.42 | $8.40 | $0.00 | $36.27 |
| 2 | 40 | $22.23 | $8.42 | $8.40 | $0.00 | $39.05 |
| 3 | 45 | $25.01 | $8.42 | $8.40 | $0.00 | $41.83 |
| 4 | 50 | $27.79 | $8.42 | $8.40 | $0.00 | $44.61 |
| 5 | 55 | $30.57 | $8.42 | $8.40 | $0.00 | $47.39 |
| 6 | 60 | $33.35 | $8.42 | $8.40 | $0.00 | $50.17 |
| 7 | 65 | $36.13 | $8.42 | $8.40 | $0.00 | $52.95 |
| 8 | 70 | $38.91 | $8.42 | $8.40 | $0.00 | $55.73 |
| 9 | 75 | $41.69 | $8.42 | $8.40 | $0.00 | $58.51 |
| 10 | 80 | $44.46 | $8.42 | $8.40 | $0.00 | $61.28 |

**Notes:** Apprentice entered prior 9/30/10:
40/45/50/55/60/65/70/75/80/85
Steps are 850 hours

**Apprentice to Journeyworker Ratio:1:3**

| | | | | | | |
|---|---|---|---|---|---|---|
| STEAM BOILER OPERATOR<br>*OPERATING ENGINEERS LOCAL 4* | 06/01/2015 | $42.42 | $10.00 | $14.55 | $0.00 | $66.97 |
| | 12/01/2015 | $43.66 | $10.00 | $14.55 | $0.00 | $68.21 |
| | 06/01/2016 | $44.41 | $10.00 | $14.55 | $0.00 | $68.96 |
| | 12/01/2016 | $45.64 | $10.00 | $14.55 | $0.00 | $70.19 |
| | 06/01/2017 | $46.63 | $10.00 | $14.55 | $0.00 | $71.18 |
| | 12/01/2017 | $47.62 | $10.00 | $14.55 | $0.00 | $72.17 |

For apprentice rates see "Apprentice- OPERATING ENGINEERS"

| | | | | | | |
|---|---|---|---|---|---|---|
| TAMPERS, SELF-PROPELLED OR TRACTOR DRAWN<br>*OPERATING ENGINEERS LOCAL 4* | 06/01/2015 | $42.42 | $10.00 | $14.55 | $0.00 | $66.97 |
| | 12/01/2015 | $43.66 | $10.00 | $14.55 | $0.00 | $68.21 |
| | 06/01/2016 | $44.41 | $10.00 | $14.55 | $0.00 | $68.96 |
| | 12/01/2016 | $45.64 | $10.00 | $14.55 | $0.00 | $70.19 |
| | 06/01/2017 | $46.63 | $10.00 | $14.55 | $0.00 | $71.18 |
| | 12/01/2017 | $47.62 | $10.00 | $14.55 | $0.00 | $72.17 |

For apprentice rates see "Apprentice- OPERATING ENGINEERS"

| Classification | Effective Date | Base Wage | Health | Pension | Supplemental Unemployment | Total Rate |
|---|---|---|---|---|---|---|
| TELECOMMUNICATION TECHNICIAN<br>*ELECTRICIANS LOCAL 103* | 03/01/2015 | $33.88 | $13.00 | $13.70 | $0.00 | $60.58 |
| | 09/01/2015 | $34.60 | $13.00 | $13.72 | $0.00 | $61.32 |
| | 03/01/2016 | $35.31 | $13.00 | $13.74 | $0.00 | $62.05 |

**Apprentice -** *TELECOMMUNICATION TECHNICIAN - Local 103*

**Effective Date -** 03/01/2015

| Step | percent | Apprentice Base Wage | Health | Pension | Supplemental Unemployment | Total Rate |
|---|---|---|---|---|---|---|
| 1 | 40 | $13.55 | $13.00 | $0.41 | $0.00 | $26.96 |
| 2 | 40 | $13.55 | $13.00 | $0.41 | $0.00 | $26.96 |
| 3 | 45 | $15.25 | $13.00 | $10.87 | $0.00 | $39.12 |
| 4 | 45 | $15.25 | $13.00 | $10.87 | $0.00 | $39.12 |
| 5 | 50 | $16.94 | $13.00 | $11.11 | $0.00 | $41.05 |
| 6 | 55 | $18.63 | $13.00 | $11.38 | $0.00 | $43.01 |
| 7 | 60 | $20.33 | $13.00 | $11.64 | $0.00 | $44.97 |
| 8 | 65 | $22.02 | $13.00 | $11.89 | $0.00 | $46.91 |
| 9 | 70 | $23.72 | $13.00 | $12.15 | $0.00 | $48.87 |
| 10 | 75 | $25.41 | $13.00 | $12.41 | $0.00 | $50.82 |

**Effective Date -** 09/01/2015

| Step | percent | Apprentice Base Wage | Health | Pension | Supplemental Unemployment | Total Rate |
|---|---|---|---|---|---|---|
| 1 | 40 | $13.84 | $13.00 | $0.42 | $0.00 | $27.26 |
| 2 | 40 | $13.84 | $13.00 | $0.42 | $0.00 | $27.26 |
| 3 | 45 | $15.57 | $13.00 | $10.88 | $0.00 | $39.45 |
| 4 | 45 | $15.57 | $13.00 | $10.88 | $0.00 | $39.45 |
| 5 | 50 | $17.30 | $13.00 | $11.14 | $0.00 | $41.44 |
| 6 | 55 | $19.03 | $13.00 | $11.39 | $0.00 | $43.42 |
| 7 | 60 | $20.76 | $13.00 | $11.65 | $0.00 | $45.41 |
| 8 | 65 | $22.49 | $13.00 | $11.90 | $0.00 | $47.39 |
| 9 | 70 | $24.22 | $13.00 | $12.17 | $0.00 | $49.39 |
| 10 | 75 | $25.95 | $13.00 | $12.43 | $0.00 | $51.38 |

**Notes:**

**Apprentice to Journeyworker Ratio:1:1**

| | | | | | | |
|---|---|---|---|---|---|---|
| TERRAZZO FINISHERS<br>*BRICKLAYERS LOCAL 3 - MARBLE & TILE* | 02/01/2015 | $47.90 | $10.18 | $18.50 | $0.00 | $76.58 |
| | 08/01/2015 | $48.80 | $10.18 | $18.57 | $0.00 | $77.55 |
| | 02/01/2016 | $49.37 | $10.18 | $18.57 | $0.00 | $78.12 |
| | 08/01/2016 | $50.27 | $10.18 | $18.65 | $0.00 | $79.10 |
| | 02/01/2017 | $50.84 | $10.18 | $18.65 | $0.00 | $79.67 |

| Classification | Effective Date | Base Wage | Health | Pension | Supplemental Unemployment | Total Rate |
|---|---|---|---|---|---|---|

**Apprentice -** *TERRAZZO FINISHER - Local 3 Marble & Tile*

**Effective Date -** 02/01/2015

| Step | percent | Apprentice Base Wage | Health | Pension | Supplemental Unemployment | Total Rate |
|---|---|---|---|---|---|---|
| 1 | 50 | $23.95 | $10.18 | $18.50 | $0.00 | $52.63 |
| 2 | 60 | $28.74 | $10.18 | $18.50 | $0.00 | $57.42 |
| 3 | 70 | $33.53 | $10.18 | $18.50 | $0.00 | $62.21 |
| 4 | 80 | $38.32 | $10.18 | $18.50 | $0.00 | $67.00 |
| 5 | 90 | $43.11 | $10.18 | $18.50 | $0.00 | $71.79 |

**Effective Date -** 08/01/2015

| Step | percent | Apprentice Base Wage | Health | Pension | Supplemental Unemployment | Total Rate |
|---|---|---|---|---|---|---|
| 1 | 50 | $24.40 | $10.18 | $18.57 | $0.00 | $53.15 |
| 2 | 60 | $29.28 | $10.18 | $18.57 | $0.00 | $58.03 |
| 3 | 70 | $34.16 | $10.18 | $18.57 | $0.00 | $62.91 |
| 4 | 80 | $39.04 | $10.18 | $18.57 | $0.00 | $67.79 |
| 5 | 90 | $43.92 | $10.18 | $18.57 | $0.00 | $72.67 |

**Notes:**

**Apprentice to Journeyworker Ratio:1:3**

| | | | | | | |
|---|---|---|---|---|---|---|
| TEST BORING DRILLER<br>*LABORERS - FOUNDATION AND MARINE* | 06/01/2015 | $36.45 | $7.30 | $13.40 | $0.00 | $57.15 |
| | 12/01/2015 | $37.20 | $7.30 | $13.40 | $0.00 | $57.90 |
| | 06/01/2016 | $37.95 | $7.30 | $13.40 | $0.00 | $58.65 |
| | 12/01/2016 | $38.95 | $7.30 | $13.40 | $0.00 | $59.65 |
| For apprentice rates see "Apprentice- LABORER" | | | | | | |
| TEST BORING DRILLER HELPER<br>*LABORERS - FOUNDATION AND MARINE* | 06/01/2015 | $35.17 | $7.30 | $13.40 | $0.00 | $55.87 |
| | 12/01/2015 | $35.92 | $7.30 | $13.40 | $0.00 | $56.62 |
| | 06/01/2016 | $36.67 | $7.30 | $13.40 | $0.00 | $57.37 |
| | 12/01/2016 | $37.67 | $7.30 | $13.40 | $0.00 | $58.37 |
| For apprentice rates see "Apprentice- LABORER" | | | | | | |
| TEST BORING LABORER<br>*LABORERS - FOUNDATION AND MARINE* | 06/01/2015 | $35.05 | $7.30 | $13.40 | $0.00 | $55.75 |
| | 12/01/2015 | $35.80 | $7.30 | $13.40 | $0.00 | $56.50 |
| | 06/01/2016 | $36.55 | $7.30 | $13.40 | $0.00 | $57.25 |
| | 12/01/2016 | $37.55 | $7.30 | $13.40 | $0.00 | $58.25 |
| For apprentice rates see "Apprentice- LABORER" | | | | | | |
| TRACTORS/PORTABLE STEAM GENERATORS<br>*OPERATING ENGINEERS LOCAL 4* | 06/01/2015 | $42.42 | $10.00 | $14.55 | $0.00 | $66.97 |
| | 12/01/2015 | $43.66 | $10.00 | $14.55 | $0.00 | $68.21 |
| | 06/01/2016 | $44.41 | $10.00 | $14.55 | $0.00 | $68.96 |
| | 12/01/2016 | $45.64 | $10.00 | $14.55 | $0.00 | $70.19 |
| | 06/01/2017 | $46.63 | $10.00 | $14.55 | $0.00 | $71.18 |
| | 12/01/2017 | $47.62 | $10.00 | $14.55 | $0.00 | $72.17 |
| For apprentice rates see "Apprentice- OPERATING ENGINEERS" | | | | | | |

| Classification | Effective Date | Base Wage | Health | Pension | Supplemental Unemployment | Total Rate |
|---|---|---|---|---|---|---|
| TRAILERS FOR EARTH MOVING EQUIPMENT<br>*TEAMSTERS JOINT COUNCIL NO. 10 ZONE A* | 06/01/2015 | $33.62 | $9.91 | $9.33 | $0.00 | $52.86 |
| | 08/01/2015 | $33.62 | $10.41 | $9.33 | $0.00 | $53.36 |
| | 12/01/2015 | $33.62 | $10.41 | $10.08 | $0.00 | $54.11 |
| | 06/01/2016 | $34.12 | $10.41 | $10.08 | $0.00 | $54.61 |
| | 08/01/2016 | $34.12 | $10.91 | $10.08 | $0.00 | $55.11 |
| | 12/01/2016 | $34.12 | $10.91 | $10.89 | $0.00 | $55.92 |
| TUNNEL WORK - COMPRESSED AIR<br>*LABORERS (COMPRESSED AIR)* | 06/01/2015 | $47.33 | $7.30 | $13.80 | $0.00 | $68.43 |
| | 12/01/2015 | $48.08 | $7.30 | $13.80 | $0.00 | $69.18 |
| | 06/01/2016 | $48.83 | $7.30 | $13.80 | $0.00 | $69.93 |
| | 12/01/2016 | $49.83 | $7.30 | $13.80 | $0.00 | $70.93 |
| For apprentice rates see "Apprentice- LABORER" | | | | | | |
| TUNNEL WORK - COMPRESSED AIR (HAZ. WASTE)<br>*LABORERS (COMPRESSED AIR)* | 06/01/2015 | $49.33 | $7.30 | $13.80 | $0.00 | $70.43 |
| | 12/01/2015 | $50.08 | $7.30 | $13.80 | $0.00 | $71.18 |
| | 06/01/2016 | $50.83 | $7.30 | $13.80 | $0.00 | $71.93 |
| | 12/01/2016 | $51.83 | $7.30 | $13.80 | $0.00 | $72.93 |
| For apprentice rates see "Apprentice- LABORER" | | | | | | |
| TUNNEL WORK - FREE AIR<br>*LABORERS (FREE AIR TUNNEL)* | 06/01/2015 | $39.40 | $7.30 | $13.80 | $0.00 | $60.50 |
| | 12/01/2015 | $40.15 | $7.30 | $13.80 | $0.00 | $61.25 |
| | 06/01/2016 | $40.90 | $7.30 | $13.80 | $0.00 | $62.00 |
| | 12/01/2016 | $41.90 | $7.30 | $13.80 | $0.00 | $63.00 |
| For apprentice rates see "Apprentice- LABORER" | | | | | | |
| TUNNEL WORK - FREE AIR (HAZ. WASTE)<br>*LABORERS (FREE AIR TUNNEL)* | 06/01/2015 | $41.40 | $7.30 | $13.80 | $0.00 | $62.50 |
| | 12/01/2015 | $42.15 | $7.30 | $13.80 | $0.00 | $63.25 |
| | 06/01/2016 | $42.90 | $7.30 | $13.80 | $0.00 | $64.00 |
| | 12/01/2016 | $43.90 | $7.30 | $13.80 | $0.00 | $65.00 |
| For apprentice rates see "Apprentice- LABORER" | | | | | | |
| VAC-HAUL<br>*TEAMSTERS JOINT COUNCIL NO. 10 ZONE A* | 06/01/2015 | $33.04 | $9.91 | $9.33 | $0.00 | $52.28 |
| | 08/01/2015 | $33.04 | $10.41 | $9.33 | $0.00 | $52.78 |
| | 12/01/2015 | $33.04 | $10.41 | $10.08 | $0.00 | $53.53 |
| | 06/01/2016 | $33.54 | $10.41 | $10.08 | $0.00 | $54.03 |
| | 08/01/2016 | $33.54 | $10.91 | $10.08 | $0.00 | $54.53 |
| | 12/01/2016 | $33.54 | $10.91 | $10.89 | $0.00 | $55.34 |
| WAGON DRILL OPERATOR<br>*LABORERS - ZONE 1* | 06/01/2015 | $35.35 | $7.30 | $13.20 | $0.00 | $55.85 |
| | 12/01/2015 | $36.10 | $7.30 | $13.20 | $0.00 | $56.60 |
| | 06/01/2016 | $36.85 | $7.30 | $13.20 | $0.00 | $57.35 |
| | 12/01/2016 | $37.85 | $7.30 | $13.20 | $0.00 | $58.35 |
| For apprentice rates see "Apprentice- LABORER" | | | | | | |
| WASTE WATER PUMP OPERATOR<br>*OPERATING ENGINEERS LOCAL 4* | 06/01/2015 | $42.83 | $10.00 | $14.55 | $0.00 | $67.38 |
| | 12/01/2015 | $44.08 | $10.00 | $14.55 | $0.00 | $68.63 |
| | 06/01/2016 | $44.83 | $10.00 | $14.55 | $0.00 | $69.38 |
| | 12/01/2016 | $46.08 | $10.00 | $14.55 | $0.00 | $70.63 |
| | 06/01/2017 | $47.08 | $10.00 | $14.55 | $0.00 | $71.63 |
| | 12/01/2017 | $48.08 | $10.00 | $14.55 | $0.00 | $72.63 |
| For apprentice rates see "Apprentice- OPERATING ENGINEERS" | | | | | | |

| Classification | Effective Date | Base Wage | Health | Pension | Supplemental Unemployment | Total Rate |
|---|---|---|---|---|---|---|
| WATER METER INSTALLER<br>*PLUMBERS & GASFITTERS LOCAL 12* | 03/01/2015 | $50.21 | $10.32 | $14.89 | $0.00 | $75.42 |
| | 09/01/2015 | $51.21 | $10.32 | $14.89 | $0.00 | $76.42 |
| | 03/01/2016 | $52.36 | $10.32 | $14.89 | $0.00 | $77.57 |
| | 09/01/2016 | $53.41 | $10.32 | $14.89 | $0.00 | $78.62 |
| | 03/01/2017 | $54.41 | $10.32 | $14.89 | $0.00 | $79.62 |

For apprentice rates see "Apprentice- PLUMBER/PIPEFITTER" or "PLUMBER/GASFITTER"

Additional Apprentice Information:

Minimum wage rates for apprentices employed on public works projects are listed above as a percentage of the pre-determined hourly wage rate established by the Commissioner under the provisions of the M.G.L. c. 149, ss. 26-27D. Apprentice ratios are established by the Division of Apprenticeship Training pursuant to M.G.L. c. 23, ss. 11E-11L.

All apprentices must be registered with the Division of Apprenticeship Training in accordance with M.G.L. c. 23, ss. 11E-11L.

All steps are six months (1000 hours.)
Ratios are expressed in allowable number of apprentices to journeymen or fraction thereof, unless otherwise specified.

** Multiple ratios are listed in the comment field.
*** APP to JM; 1:1, 2:2, 2:3, 3:4, 4:4, 4:5, 4:6, 5:7, 6:7, 6:8, 6:9, 7:10, 8:10, 8:11, 8:12, 9:13, 10:13, 10:14, etc.
**** APP to JM; 1:1, 1:2, 2:3, 2:4, 3:5, 4:6, 4:7, 5:8, 6:9, 6:10, 7:11, 8:12, 8:13, 9:14, 10:15, 10:16, etc.

# WEEKLY PAYROLL RECORDS REPORT
# & STATEMENT OF COMPLIANCE

In accordance with Massachusetts General Law c. 149, §27B, a true and accurate record must be kept of all persons employed on the public works project for which the enclosed rates have been provided. A Payroll Form is available from the Department of Labor Standards (DLS) at www.mass.gov/dols/pw and includes all the information required to be kept by law. Every contractor or subcontractor is required to keep these records and preserve them for a period of three years from the date of completion of the contract.

On a weekly basis, every contractor and subcontractor is required to submit a certified copy of their weekly payroll records to the awarding authority; this includes the payroll forms and the Statement of Compliance form. The certified payroll records must be submitted either by regular mail or by e-mail to the awarding authority. Once collected, the awarding authority is required to preserve those records for three years from the date of completion of the project.

Each such contractor and subcontractor shall furnish weekly **and** within 15 days after completion of its portion of the work, to the awarding authority directly by first-class mail or e-mail, a statement, executed by the contractor, subcontractor or by any authorized officer thereof who supervised the payment of wages, this form, accompanied by their payroll:

## STATEMENT OF COMPLIANCE

_____, 20_____

I,_____,_____
(Name of signatory party) (Title)

do hereby state:

That I pay or supervise the payment of the persons employed by
_____ on the _____
(Contractor, subcontractor or public body) (Building or project)

and that all mechanics and apprentices, teamsters, chauffeurs and laborers employed on said project have been paid in accordance with wages determined under the provisions of sections twenty-six and twenty-seven of chapter one hundred and forty nine of the General Laws.

Signature _____
Title _____

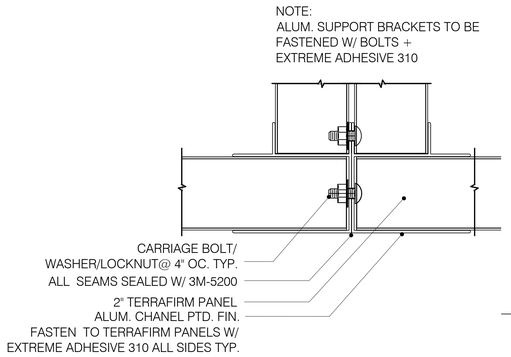


18 DETAIL - PLANTER CONNECTION
SCALE: NA

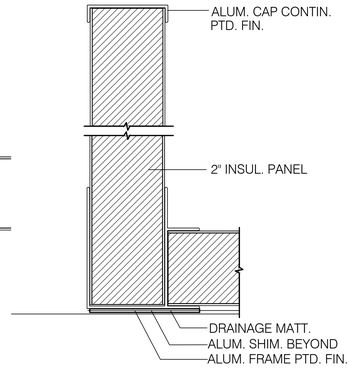


17 DETAIL
SCALE: NA

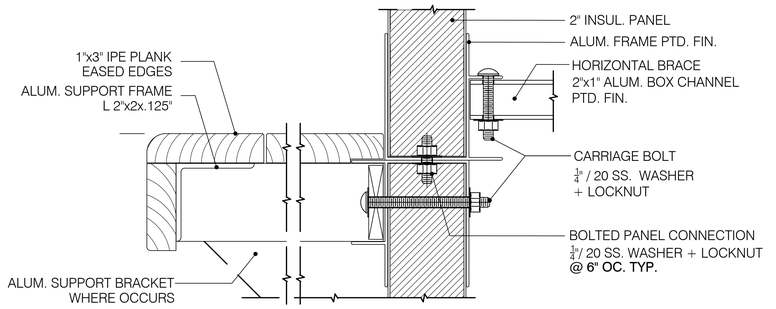


16 DETAILS
SCALE: NA

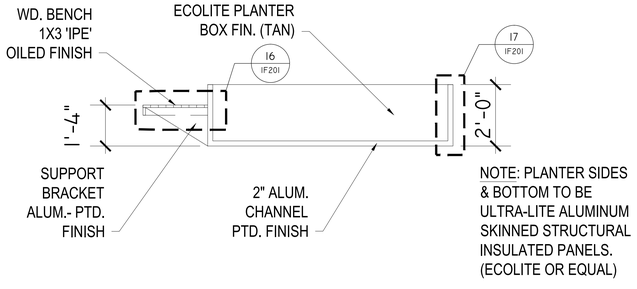


15 TYPICAL PLANTER SECTION - DETAILS
1/2" = 1'-0"

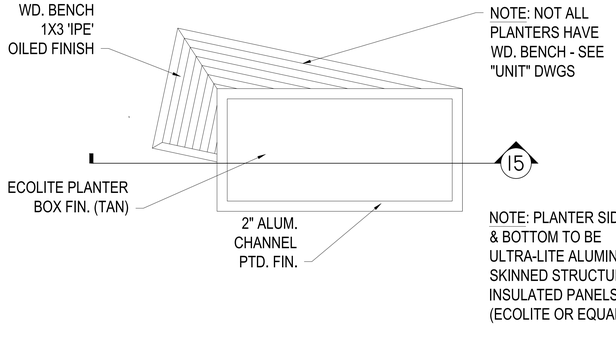


14 TYPICAL PLANTER PLAN - DETAILS
1/2" = 1'-0"

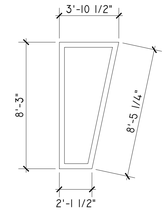


13 UNIT F4 - QTY: 1
1/4" = 1'-0"

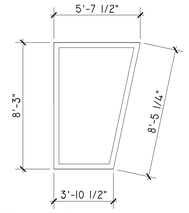


12 UNIT F3 - QTY: 1
1/4" = 1'-0"

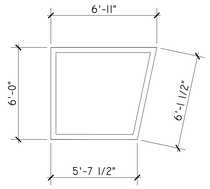


11 UNIT F2 - QTY: 1
1/4" = 1'-0"

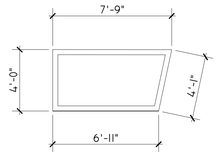


10 UNIT F1 - QTY: 1
1/4" = 1'-0"

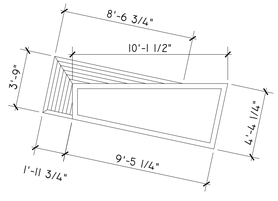


9 UNIT D - QTY: 1
1/4" = 1'-0"

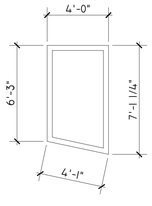


8 UNIT C5 - QTY: 1
1/4" = 1'-0"

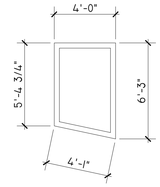


7 UNIT C4 - QTY: 1
1/4" = 1'-0"

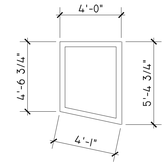


6 UNIT C3 - QTY: 1
1/4" = 1'-0"

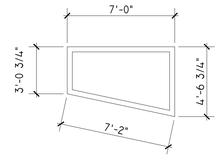


5 UNIT C2 - QTY: 1
1/4" = 1'-0"

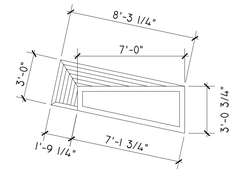


4 UNIT C1 - QTY: 1
1/4" = 1'-0"

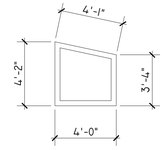


3 UNIT B - QTY: 1
1/4" = 1'-0"

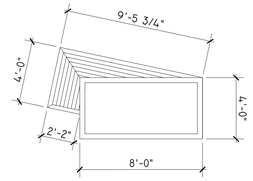


2 UNIT A - QTY: 6
1/4" = 1'-0"

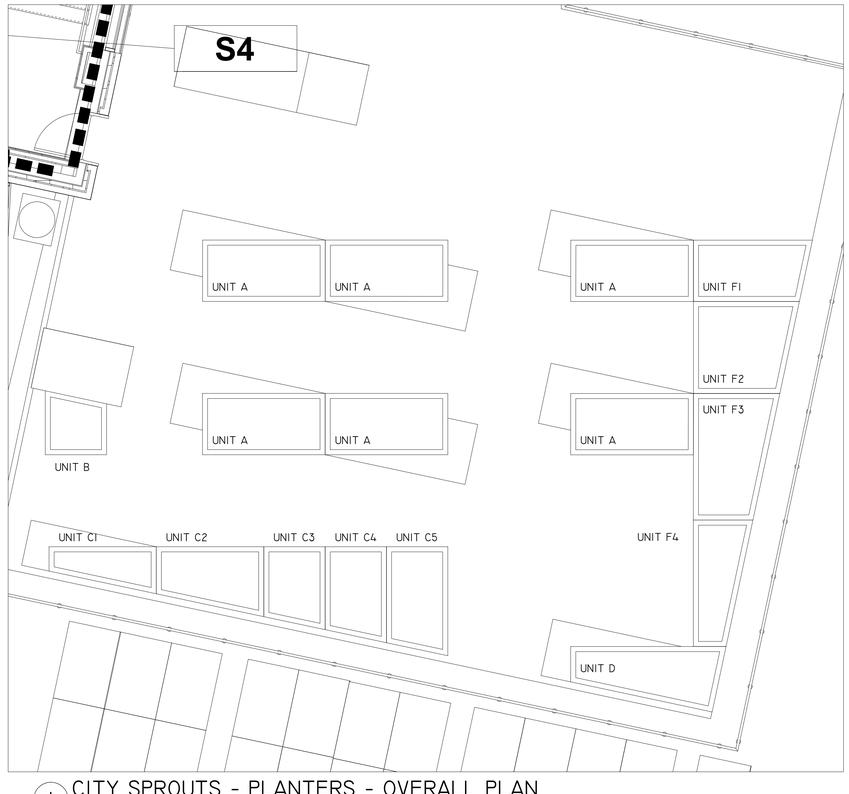


1 CITY SPROUTS - PLANTERS - OVERALL PLAN
1/4" = 1'-0"

Perkins Eastman
50 FRANKLIN ST, SUITE 203 BOSTON, MA 02110
T. 617.449.4000 www.perkinseastman.com

PROJECT TEAM:

OWNER:
**City of Cambridge**

Construction Manager
**Rich-Caulfield, MLK Venture**

Structural
**Foley Buhl Roberts & Associates, Inc.**

MEPFP
**AKF Group LLC**

Civil/Survey/Traffic
**Nitsch Engineering Inc.**

Landscape Architecture
**Brown Sardina**

Technology/Security
**Garcia, Galuska, DeSousa, Inc.**

Acoustics/AV
**Acentech**

Net Zero Energy
**In Posse**

Lighting Design
**Lam Partners**

Specifications
**Architx, LLC**

Community Outreach
**Boyes-Watson Architects**

Code
**R. W. Sullivan**

Building Envelope
**Building Science Corporation**

Sustainability
**Soden Sustainability Consulting**

Commissioning Agent
**Stephen Turner Inc.**

Cost Estimating
**VJ Associates**

Equipment
**Point Line Space, Inc.**

Environmental/Geotechnical
**CDM Smith**

Foodservice
**Crabtree McGrath**

Hardware
**Ingersoll Rand**

Hazardous Materials
**Fuss & O'Neill EnviroScience, LLC**

KEY PLAN:

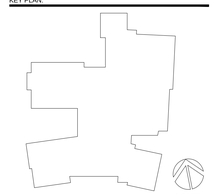


SEAL:

PROJECT INFORMATION:

Dr. Martin Luther King, Jr. School Construction Project
100 Putnam Ave, Cambridge, MA 02139

| | |
|---|---|
| CITY FILE #: | 5849D |
| PROJECT #: | 47931.00 |
| PROJECT ISSUE DATE: | 03/15/2015 |
| PROJECT STATUS: | BID |

DRAWING INFORMATION:

City Sprouts
Custom Planters
Plans and Details

DRAWING HISTORY:

| NO. | DATE | DESCRIPTION |
|---|---|---|

SHEET #:

**IF201**

\\Pls-server\Point Line Space\01-Projects\2012-PLS-003-Martin Luther King\900 - FFE\900 - Drawings\Architectural\15 0205 MLK Revit Model\47931.00 - MLK_Central_LT.rvt 2/26/2015 2:50:20 PM

# MASSACHUSETTS WEEKLY CERTIFIED PAYROLL REPORT FORM

| Company's Name | Address | Phone No. | Payroll No. |
|---|---|---|---|
| | | | |

| Employer's Signature | Title | Contract No | Tax Payer ID Number | Work Week Ending |
|---|---|---|---|---|
| | | | | |

| Awarding Authority's Name | Public Works Project Name | Public Works Project Location | Min. Wage Rate Sheet Number |
|---|---|---|---|
| | | | |

| General Prime Contractor's Name | Subcontractor's Name | | "Employer" Hourly Fringe Benefit Contributions |
|---|---|---|---|
| | | | |

| Employee Name & Complete Address | Work Classification: | Employee is OSHA 10 certified (?) | Appr. Rate (%) | Hours Worked Su. | Mo. | Tu. | We. | Th. | Fr. | Sa. | Project Hours (A) / All Other Hours | Hourly Base Wage (B) | Health & Welfare Insurance (C) | ERISA Pension Plan (D) | Supp. Unemp. (E) (B+C+D+E) | Total Hourly Prev. Wage (F) (A x F) | Project Gross Wages / Total Gross Wages | Check No. (H) |
|---|---|---|---|---|---|---|---|---|---|---|---|---|---|---|---|---|---|---|
| | | | | | | | | | | | | | | | | | | |
| | | | | | | | | | | | | | | | | | | |
| | | | | | | | | | | | | | | | | | | |
| | | | | | | | | | | | | | | | | | | |
| | | | | | | | | | | | | | | | | | | |
| | | | | | | | | | | | | | | | | | | |
| | | | | | | | | | | | | | | | | | | |

Are all apprentice employees identified above currently registered with the MA DLS's Division of Apprentice Standards? YES ☐ NO ☐

For all apprentices performing work during the reporting period, attach a copy of the apprentice identification card issued by the Massachusetts Department of Labor Standards / Division of Apprentice Standards.

No apprentices are identified above ☐

**NOTE** Pursuant to MGL c. 149, s. 27B, every contractor and subcontractor is required to submit a **true and accurate** copy of their certified weekly payroll records to the awarding authority by first-class mail or e-mail. In addition, each weekly payroll must be accompanied by a statement of compliance signed by the employer. Failure to comply may result in the commencement of a criminal action or the issuance of a civil citation.

Date Received by Awarding Authority
/ /

**City of Cambridge**
**Articles of Agreement**
**SAMPLE**

**Commodity:**
**File Number:**

This agreement is made and entered into this xx/xx/xx by and between the **City Of Cambridge** ("the CITY"), a municipal corporation organized and existing under the laws of the **Commonwealth of Massachusetts,** and **xxxxxxxxx.** a corporation duly organized and existing under the laws of the **xxxxxxx**("the Contractor").
**Address:**
**Telephone:**

**Article I. Definition.** "This Contract" as used herein shall mean these Articles of Agreement and "the bid documents," which include, but are not limited to, the instructions to bidders, the Contractor's bid or proposal, the specifications, the general conditions, the requirements, the applicable addenda, and all documents and forms submitted with the Contractor's bid or proposal that were accepted by the City.

**Article II. Duration.** The Contractor shall commence the performance of this contract for the period beginning on **xx/xx/xx** and ending on **xx/xx/xx.**

**Article III. Terms.** The Contractor agrees to provide the services all in accordance with the bid documents of **xx/xx/xx.**

**Contract Value:**

**Article IV. Payment.** The City agrees to pay to Contractor the sum set forth in the Contractor's bid or proposal. **Contractor shall invoice the department to which it provided the service, not the Purchasing Department.**

**Article V. Termination.** The following shall constitute events of default under this Contract requiring immediate termination: a) any material misrepresentation made by the Contractor, b) any failure by the Contractor to perform any of its obligations under this Contract including, but not limited to, the following: (i) failure to commence performance of this Contract at the time specified in this Contract due to a reason or circumstance within the Contractor's reasonable control, (ii) failure to perform this Contract with sufficient personnel and equipment or with sufficient material to ensure the completion of this Contract within the specified time due to a reason or circumstance within the Contractor's reasonable control, (iii) failure to perform this Contract in a manner reasonably satisfactory to the City, (iv) failure to promptly re-perform within reasonable time the services that were rejected by the City as erroneous or unsatisfactory, (v) discontinuance of the services for reasons not beyond the Contractor's reasonable control, (vi) failure to comply with a material term of this Contract, including, but not limited to, the provision of insurance and nondiscrimination, and (vii) any other acts specifically and expressly stated in this Contract as constituting a basis for termination of this Contract.

Except as otherwise provided in the Articles of Agreement, the City may terminate the contract upon seven days notice.

**Article VI . Damages.** From any sums due to the Contractor for services, the City may keep for its own the whole or any part of the amount for expenses, losses and damages as directed by the Purchasing Agent, incurred by the City as a consequence of procuring services as a result of any failure, omission or mistake of the Contractor in providing services as provided in this Contract.

**Article VII. Conflict.** In the event there is a conflict between these Articles and the bid documents, the bid documents shall supersede these articles.

**Article VIII. Governing laws and ordinances.** This Contract is made subject to all the laws of the Commonwealth and the Ordinances of the City and if any such clause thereof does not conform to such laws or ordinances, such clause shall be void (the remainder of the Contract shall not be affected) and the laws or ordinances shall be operative in lieu thereof.

**Article IX. Performance Security.** Upon execution of this Contract by the Contractor, the Contractor shall furnish to the City security for the faithful performance of this Contract in the amount of **0%** of the value of the bid in the form of a performance bond issued by a surety satisfactory to the city or in the form of a certified check.

**Article X. Equal Opportunity.** the Contractor in the performance of all work under this contract will not discriminate on the grounds of race, color, sex, age, religious creed, disability, national origin or ancestry, sexual orientation, marital status, family status, military status, or source of income in the employment practices or in the selection or retention of subcontractors, and in the procurement of materials and rental of equipment. The city may cancel, terminate or suspend the contract in whole or in part for any violation of this article.

**Article XI. Assignability.** the Contractor shall not assign, sell, subcontract or transfer any interest in this contract without prior written consent of the city.

In witness whereof the parties have hereto and to three other identical instruments set their hands the day and year first above written.

**The City:**

_____

**Richard C. Rossi**
**City Manager**

_____

**Amy L. Witts**
**Purchasing Agent**

**Approved as to Form:**

_____

**Nancy E. Glowa**
**City Solicitor**

**The Contractor:**

_____

**Signature and Title**