FILE NO. 5175

Contract Documents
And Specifications

BICYCLE PARKING RACKS INSTALLATION CONTRACT

File No. 5175 – Bicycle Parking Racks Installation

TABLE OF CONTENTS

SUBJECT	PAGES
DIVISION OF BIDDING AND CONTRACT REQUIREMENTS	
00020 Invitation to Bid	00020-1 to 00020-2
00100 Instructions to Bidders	00100-1 to 00100-6
00150 Abbreviations, References, Permits and Fees	00150-1 to 00150-3
00213 Supplemental Equal Employment Opportunity and Affirmative Action Program	00213-01 to 00213-3
00215 Living Wage Ordinance	00215-01 to 00215-8
00220 Americans With Disabilities Act	00220-1
00221 City Cori Policy	0221-01 to 00221-02
00222 City Cori Ordinance	00222-01 to 00222-02
00300* Form for General Bid	**00300-1 to 00300-14**
00310* Bid Bond	**00310-1**
00312* Statement of Bidder's Qualifications	**00312-1 to 00312-4**
00317* OSHA Certification Forms	**00317-1 to 00317-2**
00322* Cori Compliance Form	**00322-01**
00500 Agreement	00500-1 to 00500-2
00610 Performance Bond	00610-01 to 00610-02
00620 Payment Bond	00620-01 to 00620-02
00660 Certificate of Authority	00660-1
00670 Dept of Labor Wage Rates [State or Federal]	00670-01 to 00670-08
00680 Dept of Labor Statement of Compliance	00680-01 to 00680-03
00800 General Conditions	00800-01 to 00800-60
00900 Technical Specifications	Sections 01
Attachment A	

*** These forms must be submitted with the bid.**

File No. 5175 – Bicycle Parking Racks Installation

INVITATION TO BID

The City of Cambridge, Massachusetts, the Awarding Authority, invites sealed bids for the project: **BICYCLE PARKING RACKS INSTALLATION CONTRACT**

Nature and scope of work: Installation of bicycle parking racks on City and School property. The City will install an initial number of Bicycle Racks this fiscal year using ARRA Funding. The City intends to install additional Bicycle Racks in years 2 and 3 using other funding sources as available.

A contract will be awarded to the responsive and responsible bidder offering the lowest price for year one. The City will renew years two and three depending on the performance of the contractor and the price for the subsequent years. The payment and performance obligation for each succeeding year of the multi year contract will be subject to the appropriation and other available funds.

Bidding procedures shall be in accordance with M.G.L. c. 30, §39M, as mostly recently amended, and all other applicable laws.

This is a Federally funded project under the American Recovery and Reinvestment Act of 2009 (ARRA) and is subject to all associated terms and conditions for the expenditure of ARRA funds.

The estimated project value is: **$ 29,800.00**

Plans and specifications may be downloaded from the City's web page: www.cambridgema.gov, Online Services, Purchasing, Current Bid List, Construction on **THURSDAY, MAY 6, 2010**.

The contract documents may be examined at the Office of the Purchasing Agent, Room 303, City Hall, 795 Massachusetts Avenue, Cambridge, MA 02139, or at the plan room of Dodge Reports, 24 Hartwell Avenue, Lexington, MA 02173, Construction Market Data, 75 Second Avenue, Suite 320, Needham, MA 02194, New England Construction News, 100 Radnor Road, Suite 102, State College, PA.

Sealed general bids will be received at the Purchasing Department, City Hall, 795 Massachusetts Avenue, Room 303, Cambridge, MA 02139, until **THURSDAY, MAY 27, 2010 @ 2:00 p.m.** at which time all general bids will be publicly opened and read aloud.

An original and one copy of the bid forms must be submitted.

All questions must be faxed no later than 5:00 PM on TUESDAY, MAY 18, 2010 to the City of Cambridge Purchasing Department, fax #617-349-4008.

All general bids shall be accompanied by a bid deposit in the form of a certified, cashier's or treasurer's check issued by a responsible bank or trust company made payable to the City of Cambridge or a bid bond, in an amount not less than five percent (5%) of the value of the bid.

The successful bidder will be required to furnish a Labor and Material (Payment) Bond

in the amount of fifty percent (50%) of the contract sum. Bonds shall be obtained from a surety licensed to do business in the Commonwealth of Massachusetts and the form shall be satisfactory to the City of Cambridge.

The successful bidder will also be required to comply with the provisions of Chapter 306 of the Acts of 2004 in regard to required OSHA approved safety & health training.

The City of Cambridge reserves the right to reject any or all general bids if it is in the public interest to do so. The City of Cambridge reserves the right to reject any sub-bid on any sub-trade if it determines that such sub-bid does not represent the sub-bid of a person competent to perform the work as specified or that less than three such sub-bids were received and that the prices are not reasonable for acceptance without further competition.

No less than the prevailing wage rates and Davis-Bacon Wage rates which ever is higher as set forth in the schedule contained in the Contract Documents must be paid on this project.

Attention is called to the following programs and ordinances of the City of Cambridge:

1. Supplemental Equal Employment Opportunity Anti-Discrimination and Affirmative Action Program;
2. Cambridge Living Wage Ordinance
3. OSHA Certification
4. CORI City Policy
5. Occupational Safety and Health administration (OSHA)

Copies of the above are bound in the bid documents and are fully integral portions of the conditions of the contract with which each contractor and sub-contractor must comply.

A pre-bid conference for all bidders will be held as follows:

Date: **Monday, May 17, 2010**

Time: 3:00 p.m.

Place: Community Development Department
344 Broadway, 4th Floor Conference Room
Cambridge, MA 02139

Cynthia H. Griffin
Purchasing Agent

File No. 5175 – Bicycle Parking Racks Installation

INFORMATION FOR AND INSTRUCTIONS TO BIDDERS

1. DEFINITIONS AND TERMINOLOGY

Article 1, Definitions, of the General Terms and Conditions of the Contract ("General Terms and Conditions") included in the Project Manual are incorporated by reference as if fully rewritten herein. In the event of a conflict between the within definitions and those found in the General Terms and Conditions, the former govern for the purposes of these Instructions only. All other terms which are not herein defined have their ordinary dictionary meaning.

ADDENDUM (ADDENDA, PLURAL) -An Addendum is a document issued by the City prior to the opening of the General Bids that clarifies, amends, or modifies the Bidding Documents.

ALTERNATE BID-An Alternate Bid (or An Alternate) is an amount that is either added to or deducted from the Base Bid depending on the designation on the Bid form.

BASE BID-A Base Bid is the sum proposed by a Bidder to perform the Work and does not include any Alternate Bids.

BID-A Bid is a proposal to do the Work for a specified sum and includes accompanying forms that are required to be submitted.

BIDDER-A Bidder is a person who or an entity that submits a Bid pursuant to M.G.L. c. 30, §39M or c. 30B, as the case may be. The pronouns "it" and "they" are used herein when referring to a Bidder or Bidders, respectively.

BIDDING DOCUMENTS-The Bidding Documents are comprised of the entire Project Manual, which includes, but is not limited to, the Invitation to Bid (advertisement), the Instructions to Bidders, all of the forms (e.g., Bid forms, sample Agreement form, bond forms), the wage rates, the General Terms and Conditions of the Contract, any supplementary terms and conditions thereto, the Plans, the Specifications, and all addenda.

BUSINESS DAYS-Business days are defined as all days of the week excluding Saturdays, Sundays, and those holidays for which the City offices are closed for observance.

PURCHASING DEPARTMENT-The Purchasing Department refers to the City of Cambridge Purchasing Department located at 795 Massachusetts Avenue, Third Floor, Cambridge, MA 02139.

2. COPIES OF BIDDING DOCUMENTS

A Bidder may obtain complete sets of Bidding Documents upon payment of a nonrefundable fee, the amount of which is set forth in the Invitation to Bid.

No partial sets of Bidding Documents will be issued.

It is the responsibility of the Bidder to insure that it has obtained a complete set of Bidding Documents. Complete sets of Bidding Documents shall be used in preparing Bids. Neither the City nor the Architect assumes any responsibility for errors or misinterpretations resulting from the use of incomplete sets of Bidding Documents in preparing the Bids.

Distribution of the Bidding Documents is for the sole purpose of obtaining Bids and does not confer a license or grant permission for any other use of the Bidding Documents.

File No. 5175 – Bicycle Parking Racks Installation

3. STATE WAGE RATE REQUIREMENTS

The prevailing wage rates are included with the Bidding Documents and apply to this Project.

4. QUESTIONS AND INTERPRETATIONS

All questions about the meaning or intent of the Bidding Documents shall be received in writing by the Purchasing Agent, Room 303, 795 Massachusetts Avenue, Cambridge MA 02139, fax no (617) 349-4008, no later than 5:00 p.m., Tuesday, May 18, 2010. Any questions received after such time will be answered at the discretion of the City.

Written clarifications or interpretations will be issued by the Purchasing Department in the form of an Addendum. Only questions answered by an Addendum will be binding. Oral clarifications or interpretations will be without legal effect. Addenda will either be faxed or mailed to all persons having received Bidding Documents from the Purchasing Department. Each Bidder shall be responsible for determining that it has received all Addenda issued.

5. THE BID

Bidder's Representations. In submitting a Bid, the Bidder represents that:

• It has read and examined the Bidding Documents thoroughly;

• It understands the Bidding Documents;

• The Bid is made in accordance with the Bidding Documents;

• It has visited the site, has become familiar with the conditions of the site and the surrounding area, and has familiarized itself with local conditions that may in any manner affect cost, progress, or performance of the Work;

• It has correlated its own observations with the Bidding Documents;

• It has found no errors, conflicts, ambiguities, or omissions in the Bidding Documents, except for those that it has brought to the Purchasing Department's attention either orally at a pre-bid conference or in writing at least seven (7) calendar days prior to submitting its Bid;

• It is familiar with all of the applicable Federal, State, and City laws, rules, regulations, and procedures affecting its Bid and its Bid is in conformity with those laws, rules, regulations, and procedures; and

• The Bidder has complied with every requirement of these Instructions and that the Bidding Documents are sufficient in scope and detail to indicate and convey an understanding of all terms and conditions for the performance of the Work.

Contents of a Bid

The checklists below are included for the bidders' convenience and in no way waive or abridge the City's right to reject any or all bids.

A Bid must include:

• A completed Bid form (City of Cambridge form);

• A Bid deposit;

- Statement of Bidder's Qualifications (City of Cambridge form).
- OSHA Certification Form
- CORI Compliance Form

Right to Waive Informalities and Permit Curative Measures

The City reserves the right to waive any Bid informalities. The City may permit bidders who fail to include all non-statutory, City of Cambridge forms to cure such omission(s) within five days of bid opening, subject to the City's discretion.

Bid Deposits. Unless otherwise stated, every Bid must be accompanied by a Bid deposit in the form of a Bid bond, certified check on, or a treasurer's or cashier's check issued by a responsible bank or trust company, payable to the City of Cambridge. The Bid bond shall be (a) in a form satisfactory to the City, (b) with a surety company qualified to do business in the Commonwealth and satisfactory to the City, and (c) conditioned upon the faithful performance by the principal of the agreements contained in the Bid. The Bid deposit shall be no less than five percent (5%) of the value of the Bid.

Bid Forms. Each Bid shall be submitted on the Bid form included in the Project Manual. Bid prices must be stated in both dollar figures and words. In the case of a conflict, written amounts shall control over numbers. All blank spaces must be filled. Do not leave any blanks. Print "N/A" in any space not needed or used. The Bid form shall be completed in ink or by typewriter.

Acknowledgment of Addenda. Each Bidder is required to acknowledge the receipt of all Addenda (the numbers of which are to be filled in on the Bid form by the Bidder). The City, in its sole discretion, may deem a Bidder's failure to acknowledge any Addendum a minor informality.

Submission of a bid. Prior to the deadline for receipt of Bids, each Bid must be submitted to the Purchasing Department in a sealed envelope which is plainly marked on the outside with the name and address of the Bidder, the title of the Project, and the date and time of the Bid opening. Any hand delivered Bid received after the deadline will not be accepted. Any other Bid received after the deadline will be returned to the addressee. Any Bid submitted to any other office or department of the City and received by the Purchasing Department after the deadline for receipt of Bids will not be accepted. It is the responsibility of the Bidder to ensure that its Bid is received by the Purchasing Department in a timely fashion. The deadline for receipt of Bids can be extended by Addendum only.

Bids may not be submitted orally, by facsimile, by telephone, or by any other method except for the methods described above.

Modification of a Bid. A Bid may be modified only by submitting any such modification in the form of a document executed in the same manner as a Bid, delivered in a sealed envelope in the same manner as a Bid, designated as a modification to the original Bid and submitted to the Purchasing Department prior to the time designated for the opening of Bids.

Withdrawal of a Bid.
Prior to Bid Opening. A Bid may be withdrawn before the time designated for opening Bids. The Bidder requesting such withdrawal must make the request in writing and in a specific manner designated by the City if the City so requires. Withdrawal of a Bid prior to the Bid opening time will not prejudice the right of a Bidder to resubmit a Bid. A Bid cannot be withdrawn after the Bid opening time except as provided by law.

After Bid Opening. In the case of death, disability, bona fide clerical error or mechanical error of

a substantial nature or other unforeseen circumstances affecting a Bidder, a Bidder may withdraw its Bid after the time designated for Bid opening, if within five (5) days of the date designated for opening its Bid, such Bidder submits a statement under the penalties of perjury to the Purchasing Department detailing the basis for withdrawal. The City will then make a determination as to whether such Bidder has satisfied both the statutory and City requirements for such withdrawal. If the City is satisfied, the Bid Deposit will be returned to such Bidder.

Bid Opening.
All Bids received prior to the date and time designated for the Bid opening will be opened publicly and read aloud at a location designated by the Purchasing Department.

Public Bid Review and Inspection.
Upon opening, all Bids become public records except for portions thereof that are not subject to public disclosure as a matter of law.

Bids may be reviewed by the public in a manner set forth by the Purchasing Department.

Any Bidder who objects to a Bid may protest the Bid. In order to be considered, the protest must be received by the Purchasing Department within two (2) business days after the Bid opening date. The protest must be in writing, must state in detail the basis for the protest, and must be signed by the protester.

6. RESERVATION OF RIGHTS TO REJECT BIDS

The City reserves the right to reject any or all Bids, if it is in the public interest to do so.

The City reserves the right to reject any or all Bids, if it determines that the Bidder does not possess the qualifications to perform the Work specified in the Bidding Documents.

The City reserves the right to reject the Bid of any Bidder who the City has determined has not completed a prior project, whether with the City or elsewhere, because of the fault of the Bidder, its Subcontractors or employees; has been declared in default on a prior contract whether with the City or elsewhere; has failed to complete a prior project in a timely fashion whether with the City or elsewhere; based on its work record, is not capable of performing the within Contract whether due to lack of sufficient prior experience, as determined by the City, or any other reason; has a work record of its Subcontractors demanding direct payment from the City; has a work record of its Subcontractors, employees or material suppliers complaining to the City or other awarding authority regarding the Bidder's failure to pay them; has a record of complaints made to the City or other awarding authority by persons offended by the behavior of the Bidder, its Subcontractors or employees; or has a record of its failure to comply with the Commonwealth and/or City laws or requirements. "Work record" or "record" constitutes a minimum of one event in the work history of the Bidder.

The City shall reject every Bid that is not accompanied by a Bid deposit.

7. AWARD OF CONTRACT

The City shall award the contract to the lowest responsible (demonstrably possessing the skill, ability, and integrity necessary to faithfully perform the work called for by the Contract, based upon a determination of competent workmanship and financial soundness) and eligible (able to meet all requirements for Bidders set forth in the Bidding Documents) Bidder within ninety (90) Business Days after the date of the opening of the Bids. If the Bidder selected as the contractor fails to perform its agreement to execute a contract in accordance with the terms of its Bid and furnish a performance bond and a labor and materials or payment bond, if required by the Bidding

Documents, an award shall be made to the next lowest responsible and eligible Bidder. The ninety-day time limit shall not be applicable to a second or subsequent award made after the expiration of the time limit with the consent of the next lowest responsible and eligible bidder, and made because the original award made within the time limit was invalid, or because the bidder failed to execute the Agreement or to provide a performance and labor and materials or payment bond.

Any Bidder who fails to perform its agreement to execute a contract and furnish a performance bond and a labor and materials or payment bond shall forfeit its Bid deposit which shall become the property of the City, but shall not exceed the difference between its Bid price and the Bid price of the next lowest responsible and eligible bidder.

The City will notify the selected Bidder and all other Bidders of the award.

The City will submit to the selected Bidder a Notice of Award and at least four (4) unsigned copies of the Agreement between the City and the Contractor. The selected Bidder will be required to return to the Purchasing Department within ten (10) business days of the date notice of award all of the copies of the Agreement between the City and the Contractor signed, its performance bond, its labor and materials or payment bond and all required certificates of insurance. Failure of the selected Bidder to submit all of the required documents in a timely fashion may result in the withdrawal of the award. The City will return one fully signed copy of the Agreement to the Contractor. Time is of the essence in the performance of the Agreement.

8. COMPLETION TIME

The contract time shall be in a timely fashion but no more than one year with two one year options to renew commencing on or before seven (7) days following receipt of a written "Notice to Proceed" of the Owner.

9. PAYMENTS
The Contractor shall invoice the Community Development Department.

END OF INFORMATION FOR AND INSTRUCTIONS TO BIDDERS

(Reference: M.G.L. c. 30, §§39M (a) and (d)(4))

File No. 5175 – Bicycle Parking Racks Installation

ABBREVIATIONS AND REFERENCES

AASHTO - American Association of State Highways and Transportation Officials

ASTM - American Society of Testing Materials

MHD - Massachusetts Highway Department (formerly MDPW, Massachusetts Department of Public Works)

AAB – Architectural Access Board

ADA – American Disabilities Act

Where reference is made to a specification by one of the above-mentioned or other relevant agencies, it is understood that the latest revision thereof shall apply.

In case of conflict, the specification issued by the City of Cambridge shall take precedence over the above-noted specifications.

PERMITS AND FEES

Public Works Department permits to obstruct or excavate the public way must be obtained prior to beginning work. Permit fees shall be waived. The Cambridge Traffic, Parking and Transportation Department must be contacted directly for permit requirements and fees.

Permits to excavate the public way cannot be issued until the applicant has notified the appropriate utility companies, as required by Massachusetts General Laws, Chapter 370 of the Acts of 1963. The applicant must either: 1) obtain written receipts from the affected utilities, and provide copies of same to the owner; or 2) utilize the Dig-Safe System for the required notifications, and also submit written notifications for those utilities not participating in the Dig-Safe System. Written notifications must state that utility companies have been notified and the contractor cleared to begin work.

The following utility companies must be notified in writing:

M.B.T.A. (617) 222-6133
Attention: Ms. Pat Cargill, Supt. Of Transportation
21 Arlington Ave.
Charlestown, MA 02129

M.W.R.A. (617) 242-6000
100 First Avenue
Charlestown Navy Yard
Boston, MA 02129

File No. 5175 – Bicycle Parking Racks Installation

The following utility companies must be notified in writing or through Dig-Safe.

Algonquin Gas Transmission Corp. Attention: Tom Wooden Waltham Woods Corporate Center 890 Winter St. Suite 30 Waltham, MA 02451	Evening No.	(617) 254-4050 1-800-726-8383
Verizon Attention: Mr. Bob Millirick 275 Wildwood St. Woburn, MA 01801		(781) 376-0243
NSTAR Electric Planning Attention: Mr. William Lemos Right of Way 1165 Massachusetts Avenue Dorchester, MA 02125		(617) 541-5736
KeySpan Gas Attention: Mr. Dennis Peri 201 Rivermoor Street West Roxbury, MA 02132		(617) 323-9210
NStar Electric. Attention: Mr. Wendell Berthelson 1165 Massachusetts Avenue Dorchester MA 02125		(617) 541-7072 x4195
NStar Electric Construction Attn.: Brian McDevitt 1165 Massachusetts Avenue Dorchester, MA 02125		(617) 541-7805
Dalkia Energy Services LLC Attention: Thomas Herlihy Senior Project Manager 300 Cordwainer Drive Suite 202 Norwell, MA 02061		(781) 792-0640
NStar Gas Attention: Mr. Kevin Kelly 101 Linwood Drive Somerville, MA 02143		(617) 369-5591 ext. 4620
COMCAST Attention: Robert DeStefano 55 Concord St. North Reading, MA 01864		(617) 279- 7650

File No. 5175 – Bicycle Parking Racks Installation

Cambridge Public Works Department Attn.: Permit Department 147 Hampshire Street Cambridge, MA 02139	(Main Number)	(617) 349-4800
Cambridge Water Department 250 Fresh Pond Parkway Cambridge, MA 02138		(617) 349-4770
Cambridge Electrical Department 489 Broadway Cambridge, MA 02138		(617) 349-4900
Level 3 Ben Whitaker 300 Bent St Cambridge, MA 02141		(617) 429-3847
Dig-Safe		1-800-322-4844

The contractor shall have all utilities marked out along the course of this work by such means as the Engineer shall approve and shall preserve such marked locations until the work has progressed to the point where the encountered utility is fully exposed and protected as required. It shall be the contractor's responsibility to notify utilities at least 48 hours prior to the start of any excavation.

The contractor is responsible for contacting any other utilities that are not listed herein.

File No. 5175 – Bicycle Parking Racks Installation

SUPPLEMENTAL EQUAL EMPLOYMENT OPPORTUNITY ANTI-DISCRIMINATION AND AFFIRMATIVE ACTION PROGRAM

I. DEFINITIONS

For the purpose of this Contract, "minority" refers to Asians, Blacks, Hispanics, North American Indians, and Cape Verdeans.

II. NONDISCRIMINATION AGREEMENT

During the performance of this Contract, the **Contractor** and all of the Subcontractors (hereinafter, in this Article, collectively referred to as the **Contractor**), all assignees, and successors in interest, agree as follows:

1. In connection with the performance of work under this Contract, the **Contractor** shall not discriminate against any employee or applicant for employment because of race, color, religious creed, national origin or ancestry, age, disability, sexual orientation, marital status, family status, military status, source of income, or sex. The aforesaid provision shall include, but not be limited to the following: employment upgrading, demotion or transfer; recruitment advertising; recruitment layoff; termination; rates of pay or other forms of compensation; conditions or privileges of employment; and selection for apprenticeship. The **Contractor** shall post notices in conspicuous places, available for employees and applicants for employment, to be provided by the **City** setting forth the provisions of the Fair Employment Practices Law of the Commonwealth (M.G.L. c. 151B).

2. In connection with the performance of Work under this Contract, the **Contractor** shall undertake in good faith affirmative action measures designed to eliminate any discriminatory barriers in the terms and conditions of employment on the grounds of race, color, religious creed, national origin or ancestry, age, disability, sexual orientation, marital status, family status, military status, source of income, or sex and to eliminate and remedy any effects of such discrimination in the past. Such affirmative action shall entail positive and aggressive measures to ensure equal opportunity in the areas of hiring, upgrading, demotion or transfer, recruitment, layoff or termination, rate of compensation, and in-service or apprenticeship training programs. This affirmative action shall include all action required to guarantee equal employment opportunity for all persons regardless of race, color, religious creed, national origin or ancestry, age, disability, sexual orientation, marital status, family status, military status, source of income, or sex. A purpose of this provision is to ensure to the fullest extent possible an adequate supply of skilled tradespersons for this and future **City** public construction projects.

III. NEGOTIATIONS WITH MINORITY SUBCONTRACTORS

If the **Contractor** shall use any subcontractor on any Work performed under this Contract, it shall take affirmative action to negotiate with qualified MBE subcontractors that are certified by SOMWBA. This affirmative action shall cover both pre-bid and post-bid periods. It shall include notification to the Affirmative Action Officer or its designee, while bids are in preparation, of all products, work, or services for which the **Contractor** intends to negotiate bids.

IV. COMPLIANCE WITH REQUIREMENTS

The **Contractor** shall comply with the provisions of Executive Order No. 74, as amended by Executive Order No. 116 dated May 1, 1975, M.G.L. c. 151B, as amended, and Chapters 2.66 (Cambridge Employment Plan) of the Cambridge Municipal Code, all of which are herein incorporated by reference and made a part of this Contract.

As part of its obligation of remedial action under the foregoing section the **Contractor** shall maintain on its Project a not less than 25% ratio of minority employee work hours to total work hours in each job category, including, but not limited to, bricklayers, carpenters, cement, masons, electricians, ironworkers, operating engineers, and those "classes of work" enumerated in M.G.L. c. 149, §44C.

V. NON-DISCRIMINATION

The **Contractor**, in the performance of all Work after the award, and prior to completion of the

Contract Work, will not discriminate on grounds of race, color, religious creed, national origin or ancestry, age, disability, sexual orientation, marital status, family status, military status, source of income, or sex in employment practices, in the selection or retention of Subcontractors, or in the procurement of materials and rentals of equipment.

VI. SOLICITATION FOR SUBCONTRACTS AND FOR THE PROCUREMENT OF MATERIALS AN EQUIPMENT

In all solicitations either by competitive bidding or negotiation made by the **Contractor** either for work to be performed under a subcontract or for the procurement of materials or equipment, each potential subcontractor or supplier shall be notified in writing by the **Contractor** of the **Contractor's** obligations under this Contract relative to non-discrimination and affirmative action.

VII. COMPLIANCE-INFORMATION, REPORTS AND SANCTIONS

The **Contractor** will provide all information and reports required by the **City** and will permit access to its facilities and any books, records, accounts and other sources of information which may be determined by the **City** to affect the employment of personnel.

Whenever the **City** believes the **Contractor** may not be operating in compliance with the terms of this Contract, the **City** directly, or through its designated agent, shall conduct an appropriate investigation, and may confer with the parties, to determine if such **Contractor** is operating in compliance with the terms of this Contract. If the **City** or its agent finds the **Contractor** not in compliance, it shall make a preliminary report on the non-compliance and notify such **Contractor** in writing of such steps as will the judgment of the **City** or its agent bring such **Contractor** into compliance. In the event that such **Contractor** fails or refuses to fully perform such steps, the **City** shall make a final report on non-compliance and may impose of one or more of the sanctions listed or permitted by law. If, however, the **City** believes the **Contractor** has taken or is taking every possible measure to achieve compliance, it shall not make a final report of non-compliance.

3. Within fourteen (14) days of the issuance of the report, the **City** shall move to impose one or more of the following sanctions, as it may deem appropriate to attain full and effective enforcement:

a. The recovery by the **City** from the General **Contractor** of 1/100 of 1% of the Contract award price or $1,000 whichever sum is greater, in the nature of liquidated damages or if a Subcontractor is in non-compliance, the recovery by the **City** from the **Contractor**, to be assessed by the **Contractor** as a back charge against the Subcontractor of 1/10 of 1% of the subcontract price, or $400 whichever sum is greater, in the nature of liquidated damages, for each week that such party fails or refuses to comply;

b. The suspension of any payment or part thereof due under the Contract until such time as the **Contractor** is able to demonstrate its compliance with the terms of the Contract;

c. The termination, or cancellation, of the Contract, in whole or in part, unless the **Contractor** is able to demonstrate within a specified time its compliance with the terms of the Contract; or

d. The denial to the **Contractor** of the right to participate in any future contracts awarded by the **City** for a period of up to three (3) years.

If at any time after the imposition of sanctions as **Contractor** is able to demonstrate that it is in compliance with this Contract, it may request the **City** to suspend the sanctions conditionally, pending a final determination by the **City** as to whether the **Contractor** is in compliance. Upon final determination, the **City** shall either lift the sanctions or reimpose them.

VIII. SEVERABILITY

The provisions of this Article are severable and if any of these provisions shall be held unconstitutional by any court of competent jurisdiction, the decision of such court shall not affect or impair any of the remaining provisions.

File No. 5175 – Bicycle Parking Racks Installation

Chapter 2.121

LIVING WAGE ORDINANCE

Sections:

2.121.010	**Title and Purpose**
2.121.020	**Definitions**
2.121.030	**Living Wage**
2.121.040	**Waivers and Exceptions**
2.121.050	**Notification Requirements**
2.121.060	**Duties of covered Employers**
2.121.070	**Community Advisory Board**
2.121.080	**Enforcement**
2.121.090	**Severability**
2.121.100	**Effective Date**

2.121.010 Title and Purpose.

This Chapter shall be known as the "Cambridge Living Wage Ordinance". The purpose of this ordinance is to assure that employees of the City of Cambridge and employees of City contractors, subcontractors and beneficiaries of tax abatements, loans, grants, subsidies and other assistance provided by the City earn an hourly wage that is needed to support a family of four.

2.121.020 Definitions.

For the purposes of this ordinance, the term:
(a) "Applicable Department" means the Personnel Department for employees of the City of Cambridge, the Purchasing Department, with the advice and assistance of the appropriate department which receives the services, for Covered Employers who contract or subcontract with the City of Cambridge, the School Department for employees, contractors and subcontractors of the School Department, and the City Manager's Office for any other Person who is a Beneficiary of assistance other than a contract or subcontract.

(b) "Assistance" means:
(1) any grant, loan, tax incentive, bond financing, subsidy, or other form of assistance valued at least $10,000 that an employer receives by or through the authority or approval of the City of Cambridge, including, but not limited to, c. 121A tax abatements, industrial development bonds, Community Development Block Grant (CDBG) loans and grants, Enterprise Zone designations awarded after the effective date of this Chapter, and the lease of city owned land or buildings below market value; and
(2) any service contract, as defined herein, of at least $10,000 with the City of Cambridge that is made with an employer to provide services pursuant to G.L.c. 30B or other public procurement laws, awarded, renegotiated or renewed after the effective date of this Chapter.
(3) any service subcontract, as defined herein, of at least $10,000.

(c) "Beneficiary" means:
(1) any person who is a recipient of Assistance;
(2) any company or person that is a tenant or sub-tenant, leaseholder or sub-leaseholder of a recipient of Assistance, provided that said company or person employs at least 25 persons

and occupies property or uses equipment or property that is improved or developed as a result of Assistance, after the effective date of this Chapter; and

(d) "Covered Employer" means the City of Cambridge or a Beneficiary of Assistance.

(e) "Covered Employee" means:

(1) a person employed by the City of Cambridge except for persons in those positions listed in Section 2.121.040(j) of this ordinance; and

(2) a person employed by a Covered Employer, or a person employed by an independent contractor doing business with a Covered Employer, who would directly expend any of his or her time on the activities funded by the contract or the activities for which the Beneficiary received the Assistance, except for persons in those positions listed in Section 2.121.040(j) of this ordinance..

(f) "Living Wage" has the meaning stated in Section 2.121.030.

(g) "Person" means one or more of the following or their agents, employees, servants, representatives, and legal representatives: individuals, corporations, partnerships, joint ventures, associations, labor organizations, educational institutions, mutual companies, joint-stock companies, trusts, unincorporated organizations, trustees, trustees in bankruptcy, receivers, fiduciaries, and all other entities recognized at law by the Commonwealth of Massachusetts.

(h) "Service Contract" means a contract let to a contractor by the City of Cambridge for the furnishing of services, to or for the City, except contracts where services are incidental to the delivery of products, equipment or commodities. A contract for the purchase or lease of goods, products, equipment, supplies or other property is not a "service contract" for the purposes of this definition.

(i) "Service Subcontract" means a subcontract primarily for the furnishing of services, to or for a recipient of Assistance, except where services are incidental to the delivery of products, equipment or commodities. A contract for the purchase or lease of goods, products, equipment, supplies or other property is not a "service subcontract" for the purposes of this definition.

2.121.030 Living Wage.

(a) Applicability. Covered Employers shall pay no less than the Living Wage to their employees.

(b) Amount of wage. The Living Wage shall be calculated on an hourly basis and shall be no less than $10.00, subject to adjustment as provided herein. The Living Wage shall be upwardly adjusted each year no later than March first in proportion to the increase at the immediately preceding December 31 over the year earlier level of the Annual Average Consumer Price Index for All Urban Consumers (CPI -U) Boston-Lawrence-Salem, MA - NH, as published by the Bureau of Labor Statistics, United States Department of Labor applied to $10.00.

(c) No reduction in collective bargaining wage rates. Nothing in this Chapter shall be read to require or authorize any beneficiary to reduce wages set by a collective bargaining agreement.

(d) Cuts in non-wage benefits prohibited. No Beneficiary will fund wage increases required by this Chapter, or otherwise respond to the provisions of this Chapter, by reducing the health, insurance, pension, vacation, or other non-wage benefits of any of its employees.

2.121.040 Waivers and Exceptions.

(a) Waivers. A Covered Employer may request that the City Manager grant a partial or whole waiver to the requirements of this Chapter.

(b) General Waivers. Waivers may be granted where application of this Chapter to a particular form of Assistance is found by the City Solicitor to violate a specific state or federal statutory, regulatory or constitutional provision or provisions, and the City Manager approves the waiver on that basis.

(c) Hardship Waivers for certain not-for-profit employers. An employer, who has a contract with the City of Cambridge which is not subject to the provisions of G.L. c. 30B, may apply to the City Manager for a specific waiver where payment of the Living Wage by a not-for-profit Covered Employer would cause a substantial hardship to the Covered Employer.

(d) Chapter 30B contract waivers. Prior to issuing an invitation for bids for a procurement contract subject to the provisions of G.L. c. 30B, any Applicable Department may apply to the City Manager for a waiver of the application of the Living Wage to the contract where payment of the Living Wage by a Covered Employer would make it inordinately expensive for the City to contract for the services or would result in a significant loss of services, because the contracted work cannot be segregated from the other work of the Covered Employer.

(e) General Waiver Request Contents. All General Waiver requests shall include the following:

(1) The nature of the Assistance to which this Chapter applies;

(2) The specific or official name of the Assistance and Assistance program, the statutory or regulatory authority for the granting of the Assistance, and a copy of that authority;

(3) The conflicting statutory, regulatory, or constitutional provision or provisions that makes compliance with this Chapter unlawful, and a copy of each such provision; and

(4) A factual explication and legal analysis of how compliance with this Chapter would violate the cited provision or provisions, and the legal consequences that would attach if the violation were to occur.

(f) Hardship Waiver Request Contents. All Hardship Waiver requests shall include the following:

(1) The nature of the Assistance to which this Chapter applies;

(2) A detailed explanation of why payment of the Living Wage would cause a substantial hardship to the Covered Employer; and

(3) A statement of proposed wages below the Living Wage.

(g) Chapter 30B Contract Waiver Request Contents. A Chapter 30B contract waiver request shall include the following:

(1) The nature of the Assistance to which this Chapter applies;

(2) A detailed explanation of why the contracted work cannot be segregated from the other work of the bidding Covered Employers thereby making the cost of the contract with the payment of the Living Wage inordinately expensive or would result in a significant loss of services;

(h) Community Advisory Board review and recommendation regarding waiver requests. The Community Advisory Board, as described in Section 2.121.070 of this ordinance, shal l consider waiver requests along with their supporting documentation and analysis, and may hold a public hearing to consider the views of the public before making a recommendation to the City Manager regarding the waiver request. For a hardship waiver, the Community Advisory Board shall offer an opportunity to be heard to employees of the Covered Employer. After reviewing the recommendation of the Community Advisory Board, the City Manager may approve and grant or deny all or part of a request. The City Manager may in his or her discretion grant a temporary hardship waiver pending the hearing before the Community Advisory Board. For Chapter 30B contract waivers, the Community Advisory Board shall make its recommendation to the City Manager no more than thirty days after it is notified of the request for a Chapter 30B contract waiver.

(i) Terms of exceptions. If an employer is subject to this Chapter as a result of its receipt of

more than one kind of Assistance covered by this Chapter, and if the City Manager grants a waiver with respect to one form of Assistance, the City Manager need not find that this Chapter is inapplicable to the employer with respect to another form of Assistance received by the employer.

(j) Exceptions. The following positions will be excepted from the requirement of the payment of the Living Wage upon certification in an affidavit in a form approved by the Applicable Department and signed by a principal officer of the Covered Employer that the positions are as follows:

(1) youth hired pursuant to a city, state, or federally funded program which employs youth as defined by city, state, or federal guidelines, during the summer, or as part of a school to work program, or in other related seasonal or part-time program;

(2) work-study or cooperative educational programs;

(3) trainees who are given a stipend or wage as part of a job training program that provides the trainees with additional services, which may include, but are not limited to, room and board, case management, or job readiness services.

(4) persons working in a recognized supported employment program that provides workers with additional services, which may include, but are not limited to, room and board, case management, counseling, or job coaching:

(5) positions where housing is provided by the employer;

(6) employees who are exempt from federal or state minimum wage requirements; and

(7) individuals employed by the City of Cambridge where the employment of such individuals is intended primarily to provide a benefit or subsidy to such individuals, although the City is compensating them for work performed.

2.121.050 Notification Requirements.

All Applicable Departments shall provide in writing an explanation of the requirements of this ordinance in all requests for bids for service contracts and to all persons applying for Assistance as defined by this ordinance. All persons who have signed a service contract with the City of Cambridge or a contract for Assistance shall forward a copy of such requirements to any person submitting a bid for a subcontract on the Assistance contract.

2.121.060 Duties of Covered Employers.

(a) Notification Requirements. Covered employers shall provide each Covered employee with a fact sheet about this ordinance and shall post a notice about the ordinance in a conspicuous location visible to all employees. The fact sheet and poster shall be provided to the Covered Employer by the Applicable Department and shall include:

(1) notice of the Living Wage amount;

(2) a summary of the provisions of this ordinance;

(3) a description of the enforcement provisions of the ordinance;

(4) the name, address, and phone number of a person designated by the Applicable Department to whom complaints of noncompliance with this ordinance should be directed.

(b) Contract for Assistance. At the time of signing a contract for assistance with the City of Cambridge or with a Beneficiary, the contract must include the following:

(1) the name of the program or project under which the contract or subcontract is being awarded;

(2) a local contact name, address, and phone number for the Beneficiary;

(3) a written commitment by the Beneficiary to pay all Covered Employees not less than the Living Wage as subject to adjustment under this ordinance and to comply with the provisions of this ordinance;

(4) a list of Covered Employees under the contract with the employees' job titles;

(5) a list of all subcontracts either awarded or that will be awarded to Beneficiaries with funds from the Assistance. Upon signing any subcontracts, the Covered Employer shall forward a copy of the subcontract to the Applicable Department.

(c) Maintenance of payroll records. Each Covered Employer shall maintain payrolls for all Covered Employees and basic records relating thereto and shall preserve them for a period of three years. The records shall contain the name and address of each employee, the job title and classification, the number of hours worked each day, the gross wages, deductions made, actual wages paid, and copies of social security wage and withholding reports, and evidence of payment thereof and such other data as may be required by the Applicable Department from time to time.

(d) Applicable Department duties. The Applicable Department shall cause investigations to be made as may be necessary to determine whether there has been compliance with this Ordinance. The Applicable Department shall report the findings of all such investigations to the Community Advisory Board.

(e) Covered Employer to cooperate. The Covered Employer shall submit payroll records on request to the Applicable Department. The Covered Employer shall permit City representatives to observe work being performed upon the work site, to interview employees and to examine the books and records relating to the payrolls being investigated to determine payment of wages.

(f) City Assistance Reports. Each Applicable Department shall file a City Assistance Report with the City Manager and the Community Advisory Board by July 31 of each year The report shall include, for each Assistance package or contract approved during the preceding fiscal year:

(1) the name of the Applicable Department (awarding agency), the name of the specific program under which the Assistance was awarded, and the origin of funds for Assistance;

(2) a description of the purpose or project for which the Assistance was awarded;

(3) the name, address, and phone number of a local contact person for the Covered Employer;

(4) the total cost to the City of Assistance provided to each Beneficiary, including both face-value of Assistance, as well as revenue not collected as a result of the Assistance.

2.121.070 Community Advisory Board.

(a) Purpose. The purpose of the Community Advisory Board shall be to review the effectiveness of this Ordinance at creating and retaining Living Wage jobs, to make recommendations to the City Manager regarding the granting of Waivers to Covered Employers, to review the implementation and enforcement of this ordinance, and to make recommendations from time to time in connection therewith.

(b) Composition. The Community Advisory Board shall be composed of nine members and shall include representatives of labor unions, community organizations and the business community. All members will be appointed by the City Manager. Members of the Board shall serve a three-year term. Whenever a vacancy shall occur the City Manager shall appoint a replacement within thirty days of said vacancy.

(c) Meetings. The Community Advisory Board shall meet quarterly and in special session as required. All meetings of the Board shall be open to the public and will allow for public testimony on the uses of the City Assistance generally, and on specific instances of Assistance or proposed Assistance as received or sought by individual enterprises.

(d) Conflict of Interest. No member of the Community Advisory Board shall participate in any proceeding concerning a Beneficiary, a Covered Employer or a Covered Employee, or applicant for waiver or exemption, if the member or any member of his or her immediate family has a direct or indirect financial interest in the outcome of said proceeding.

2.121.080 Enforcement.

(a) Enforcement powers. In order to enforce this Chapter, the Applicable Department may, with the approval and assistance of the City Solicitor, issue subpoenas, compel the attendance and

testimony of witnesses and production of books, papers, records, and documents relating to payroll records necessary for hearing, investigations, and proceedings. In case of failure to comply with a subpoena, the City may apply to a court of appropriate jurisdiction for an order requiring the attendance and testimony of witnesses and the productions of books, papers, records, and documents. Said court, in the case of a refusal to comply with any such subpoena, after notice to the person subpoenaed, and upon finding that the attendance or testimony of such witnesses or the production of such books, papers, records, and documents, as the case may be, is relevant or necessary for such hearings, investigation, or proceedings, may issue an order requiring the attendance or testimony of such witnesses or the production of such documents and any violation of the court's order may be punishable by the court as contempt thereof.

(b) Complaint procedures. An employee who believes that he or she is a Covered Employee or an applicant for a position to be filled by a Covered Employee who believes that his or her employer is not complying with requirements of this Chapter applicable to the employer may file a complaint with the Applicable Department or with the Community Advisory Board. Complaints of alleged violations may also be filed by concerned citizens or by the City Council. Complaints of alleged violations may be made at any time, but in no event more than three years after the last date of alleged violation, and shall be investigated promptly by the Applicable Department. Statements written or oral, made by an employee, shall be treated as confidential and shall not be disclosed to the Covered Employer without the consent of the employee.

(c) Investigations and hearings. The Applicable Department shall investigate the complaint, and may, in conjunction with the City Solicitor, and in accordance with the powers herein granted, require the production by the employer of such evidence as required to determine compliance. Prior to ordering any penalty the applicable Department shall give notice to the employer and conduct a hearing. If at any time during these proceedings, the employer voluntarily makes restitution of the wages not paid to the employee making the complaint and to any similarly situated employees, by paying all back wages owed plus interest at the average prior year Massachusetts passbook savings bank rate, or otherwise remedies the violation alleged if the violation involves matters other than wages, then the Applicable Department shall thereafter dismiss the complaint against the employer.

(d) Remedies. In the event that the Applicable Department, after notice and hearing, determines that any Covered Employer has failed to pay the Living Wage rate or has otherwise violated the provisions of this Chapter, the Applicable Department may order any or all of the following penalties and relief:

(1) Fines up to the amount of $300 for each Covered Employee for each day that the Covered Employer is in violation of this Ordinance, except if the violation was not knowing and willful, then the total fine shall not exceed the amount of back wages plus interest owed;
(2) Suspension of ongoing contract and subcontract payments;
(3) Ineligibility for future City Assistance for up to three years beginning when all penalties and restitution have been paid in full. In addition, all Covered Employers having any principal officers who were principal officers of a barred beneficiary shall be ineligible under this section; and
(4) Any other action deemed appropriate and within the discretion and authority of the city.

Remedies in this section shall also apply to the party or parties aiding and abetting in any violation of this chapter.

(e) Private right of action. Any Covered Employee, or any person who was formerly employed by a Beneficiary, may bring an action to enforce the provisions of this Chapter to recover back pay and benefits, attorneys fees and costs, by filing suit against a Beneficiary in any court of competent jurisdiction.

(f) Remedies herein non-exclusive. No remedy set forth in this Chapter is intended to be

exclusive or a prerequisite for asserting a claim for relief to enforce the right granted under this Chapter in a court of law. This Chapter shall not be construed to limit an employee's right to bring a common law cause of action for wrongful termination.

(g) Retaliation and discrimination barred. A Covered Employer shall not discharge, reduce the compensation or otherwise retaliate against any employee for making a complaint to the City, otherwise asserting his or her rights under this Chapter, participating in any of its proceedings or using any civil remedies to enforce his or her rights under the Chapter. The City shall investigate allegations of retaliation or discrimination and shall, if found to be true, after notice and a hearing, order appropriate relief as set out in paragraphs (c) and (d) herein

2.121.090 Severability.

In the event any provision of this ordinance shall be held invalid or unenforceable by any court of competent jurisdiction, such holding shall not invalidate or render unenforceable any other provisions hereof.

2.121.100 Effective Date.

This law shall be effective sixty (60) after final passage.

File No. 5175 – Bicycle Parking Racks Installation

The Living Wage Ordinance (2.121) provides, at 1.121.030(b) that the wage shall be upwardly adjusted each year no later than March 1st in proportion to the increase in the Annual Average Consumer Price Index for the prior calendar year for All Urban Consumers (CPI-U) in the Boston area, as published by the federal Bureau of Labor Statistics.

For calendar year 1999, the CPI-U increased by 2.5%. Therefore the new living wage, as of March 1, 2000 is $10.25.

For calendar year 2000, the CPI-U increased by 4.3%. Therefore the new living wage, as of March 1, 2001 is $ 10.68.

For calendar year 2001, the CPI-U increased by 4.3%. Therefore the new living wage, as of March 1, 2002 is $11.11.

For calendar year 2002, the CPI-U increased by 2.6% . Therefore the new living wage, as of March 1, 2003 is $11.37.

The City Council has voted to amend the section of the Living Wage Ordinance (1.121.030 (b) that provides the method for calculating cost of living increases each year. As a result of this change, the living wage as of March 30, 2003 is $11.44.

For calendar year 2003, the CPI-U increased by 3.76%. Therefore the new living wage, as of March 1, 2004 is $11.87.

For calendar year 2004, the CPI-U increased by 2.7%. Therefore the new living wage, as of March 1, 2005 is $12.19.

For calendar year 2005, the CPI-U increased by 3.3%. Therefore the new living wage, as of March 1, 2006 is $12.59.

For calendar year 2006 the CPI-U increased by 3.1 %. Therefore the new living wage, as of March 1, 2007 is $12.98.

For calendar year 2007 the CPI-U increased by 1.9 %. Therefore the new living wage, as of March 1, 2008 is $13.23.

For calendar year 2008 the CPI-U increased by 3.5 %. Therefore the new living wage, as of March 1, 2009 is $13.69.

For calendar year 2009 the CPI-U decreased by .67 %. Therefore the new living wage, as of March 1, 2010 will remain at $13.69.

File No. 5175 – Bicycle Parking Racks Installation

AMERICANS WITH DISABILITIES ACT (42 U.S.C. 12131)

Section 504 of the Rehabilitation Act of 1973

Tax Compliance/Anti-Collusion Statement

The American with Disabilities Act ("the Act") applies to all employers of fifteen or more employees. All Contractors that are subject to the Act must comply with its provisions. In further compliance with the Act, all Contractors who enter into contracts with the City are prohibited from discrimination against the City's employees, regardless of the size of the Contractor.

The Act protects against discrimination on the basis of "disability", which is defined as a physical or mental impairment that substantially limits at least one "major life activity"; discrimination against a person having a history or has a record of such impairment; and discrimination against an individual regarded - even if inaccurately - as having such an impairment. The Act also expressly prohibits job discrimination that is based on an individual's relationship or association with a disabled person.

The bidder shall not discriminate against any qualified employee or job applicant with a disability and will make the activities, programs and services covered by any contract awarded through this procurement readily accessible to and usable by individuals with disabilities. To be qualified for a job, or to avail oneself of a bidder's services, the individual with the disability must meet the essential eligibility requirements for receipt of the bidder's services or participation in the bidder's programs or activities with or without: 1) reasonable modifications to the bidder's rules, policies and practices; 2) removal of architectural, communication, or transportation barriers; or, 3) provisions of auxiliary aids and services

By submitting its bid, the bidder certifies to the City of Cambridge that it understands and will comply with all applicable provisions of the Act, including compliance with applicable provisions of Section 504 of the Rehabilitation Act of 1973, if the bidder is receiving federal funds.

The undersigned certifies under penalty of perjury that this bid or proposal has been made and submitted in good faith and without collusion or fraud with any other person. As used in this certification, the "person" shall mean any natural person, business, partnership, corporation, union, committee, club, or other organization, entity, or group of individuals.

As required by M.G.L. c. 62C, 49A, the undersigned certifies under the penalties of perjury that the bidder has complied with all laws of the commonwealth relating to taxes, reporting of employees and contractors, and withholding and remitting child support.

Date: _____

_____
(Print name of person signing bid)

_____
(Signature & Title)

This form must be submitted with your bid

File No. 5175 – Bicycle Parking Racks Installation

City of Cambridge CORI Policy

1. Where Criminal Offender Record Information (CORI) checks are part of a general background check for employment or volunteer work, the following practices and procedures will generally be followed.

2. CORI checks will only be conducted as authorized by Criminal History Systems Board (CHSB). All applicants will be notified that a CORI check will be conducted. If requested, the applicant will be provided with a copy of the CORI policy.

3. An informed review of a criminal record requires adequate training. Accordingly, all personnel authorized to review CORI in the decision-making process will be thoroughly familiar with the educational materials made available by the CHSB.

4. Prior to initiating a CORI check, the City will review the qualifications of the applicant to determine if the applicant is otherwise qualified for the relevant position. The City will not conduct a CORI check on an applicant that is not otherwise qualified for the relevant position.

5. Unless otherwise provided by law, a criminal record will not automatically disqualify an applicant. Rather, determination of suitability based on CORI checks will be made consistent with this policy and any applicable law or regulations.

6. If a criminal record is received from CHSB, the authorized individual will closely compare the record provided by CHSB with the information on the CORI request form and any other identifying information provided by the applicant, to ensure the record relates to the applicant.

7. If, in receiving a CORI report, the City receives information it is not authorized to receive (e.g. cases with dispositions such as not guilty or dismissal, in circumstances where the City is only authorized to receive convictions or case-pending information), the City will inform the applicant and provide the applicant with a copy of the report and a copy of CHSB's *Information Concerning the Process in Correcting a Criminal Record* so that the applicant may pursue correction with the CHSB.

8. If the City of Cambridge is planning to make an adverse decision based on the results of the CORI check, the applicant will be notified immediately. The applicant shall be provided with a copy of the criminal record and the City's CORI policy, advised of the part(s) of the record that make the individual unsuitable for the position and given an opportunity to dispute the accuracy and relevance of the CORI record.

File No. 5175 – Bicycle Parking Racks Installation

9. Applicants challenging the accuracy of the criminal record shall be provided a copy of CHSB's *Information Concerning the Process in Correcting a Criminal Record.* If the CORI record provided does not exactly match the identification information provided by the applicant, the City of Cambridge will make a determination based on a comparison of the CORI record and documents provided by the applicant. The City of Cambridge may contact CHSB and request a detailed search consistent with CHSB policy.

10. If the City of Cambridge reasonably believes the record belongs to the applicant and is accurate, then the determination of suitability for the position will be made. Unless otherwise provided by law, factors considered in determining suitability may include, but not be limited to the following:

    (a) Relevance of the crime to the position sought;
    (b) The nature of the work to be performed;
    (c) Time since the conviction;
    (d) Age of the candidate at the time of offense;
    (e) Seriousness and specific circumstances of the offense;
    (f) The number of offenses;
    (g) Whether the applicant has pending charges;
    (h) Any relevant evidence of rehabilitation or lack thereof;
    (i) Any other relevant information, including information submitted by the candidate or requested by the City.

11. The Personnel Department will assist affected departments, in assessing the suitability of candidates in accordance with paragraph 10 a through i above, to ensure consistency, fairness, and protection of employment opportunities and the public interest.

12. The City of Cambridge will notify the applicant of the decision and the basis of the decision in a timely manner.

13. CORI information shall not be disseminated or shared with any unauthorized employees or other, but shall be maintained in confidence consistent with the obligations of law.

Revised May 5, 2007

00221-02

File No. 5175 – Bicycle Parking Racks Installation

ORDINANCE NUMBER 1312

Final Publication Number 3155. First Publication in the Chronicle on December 13, 2007.

City of Cambridge

In the Year Two Thousand and Eight

AN ORDINANCE

In amendment to the Ordinance entitled "Municipal Code of the City of Cambridge"

Be it ordained that Cambridge Municipal Code Chapter 2.112 is hereby amended by adding a new Section 2.112.060 entitled "CORI Screening by Vendors of the City of Cambridge" as follows:

Adding after Section 2.112.050 the following new sections:

SECTION 2.112.060

CORI SCREENING BY VENDORS OF THE CITY OF CAMBRIDGE

Sections:

2.112.061 Purpose
2.112.062 Definitions
2.112.063 CORI-Related Standards of the City of Cambridge
2.112.064 Waiver
2.112.065 Applicability

2.112.061 Purpose

These sections are intended to ensure that the persons and businesses supplying goods and/or services to the City of Cambridge deploy fair policies relating to the screening and identification of persons with criminal backgrounds through the CORI system.

2.112.062 Definitions

Unless specifically indicated otherwise, these definitions shall apply and control.

Awarding Authority means the City of Cambridge Purchasing Agent or designee.

Vendor means any vendor, contractor, or supplier of goods and/or services to the City of Cambridge.

File No. 5175 – Bicycle Parking Racks Installation

2.112.063 CORI-Related Standards of the City of Cambridge

The City of Cambridge employs CORI-related policies, practices and standards that are fair to all persons involved and seeks to do business with vendors that have substantially similar policies, practices and standards. The City of Cambridge will do business only with vendors who, when required by law to perform CORI checks, employ CORI-related policies, practices, and standards that are consistent with policies, practices and standards employed by the City of Cambridge. The awarding authority shall consider any vendor's deviation from policies, practices and standards employed by the City of Cambridge as grounds for rejection, rescission, revocation, or any other termination of the contract.

2.112.064 Waiver

The City Manager may grant a waiver to anyone who or which has submitted a request for waiver if it is objectively reasonable; and the City Manager, or a delegate, shall report promptly in writing to the City Council all action taken with respect to every request for a waiver and the reasons for the decision.

2.112.065 Applicability

If any provision of these sections imposes greater restrictions or obligations than those imposed by any other general law, special law, regulation, rule, ordinance, order, or policy then the provisions of these sections shall control.

In City Council January 28, 2008.
Passed to be ordained by a yea and nay vote:-
Yeas 9; Nays 0; Absent 0.
Attest:- D. Margaret Drury, City Clerk.

A true copy;

ATTEST:-

D. Margaret Drury
City Clerk

File No. 5175 – Bicycle Parking Racks Installation

FORM FOR GENERAL BID

To the Awarding Authority:

A. The undersigned proposes to furnish all labor and materials required for

Bicycle Parking Racks Installation Contract

in accordance with the accompanying plans and specifications including all Labor and Materials, for the contract price specified below, subject to additions and deductions according to the terms of the specifications.

Contractor acknowledges that quantities and allowances are estimates only.

Bidder must agree to commence work on or before seven (7) days following receipt of a written "Notice to Proceed" of the Owner. The term of the contract will be one year with two one year options to renew at the sole discretion of the City.

B. QUALITY REQUIREMENTS

A "NO" response or a failure to respond to any of the following Quality Requirements will result in a rejection of your bid. Circle Yes or No for each of the following requirements.

1. Bidder has been in the business of performing installation of bicycle parking racks, parking meters, or fences for municipalities or public utilities for at least three (3) years.

   YES NO

2. Bidder has a minimum of three (3) years of experience with contracts or projects of size and scope equal or more than this project.

   YES NO

3. Bidder has equipment and personnel available to respond within ten (10) calendar days once installation list is submitted to contractor throughout the contract period.

   YES NO

4. Bidder can provide, upon request, proof of financial solvency.

   YES NO

5. The submitted bid is without conditions, exceptions or modifications to the bid document.

   YES NO

NAME OF BIDDER:_____

File No. 5175 – Bicycle Parking Racks Installation

BID SUBMISSION REQUIREMENTS

Failure to submit documents may result in the determination that your bid is non-responsive unless the City deems such failure to be a minor informality. The following documents must be submitted with your proposal:

1. Provide at least two references (names, addresses and phone numbers) evidencing experience with a project equivalent nature, scope and size. City reserves the right use itself as a reference.

_____

_____

_____

2. Provide at least two descriptions of work done for similar projects. Please include relevant photographic evidence. The bidder may be required to produce a facsimile project upon request.

C. This bid includes addenda numbered _____

D. PRICE PROPOSAL

The proposed contract price is_____dollars ($_____)

E. The subdivision of the proposed contract price is as follows: **(All quantities and allowances are approximate)**

F. The undersigned agrees if selected as General Contractor, within ten (10) working days after presentation thereof by the City, the Contractor will:

1. Execute a contract in accordance with the terms of this general bid;
2. Furnish a performance bond and a labor and materials or payment bond

   a. of a surety company qualified to do business under the laws of the Commonwealth and satisfactory to the City;
   b. in the sum of one hundred percent of the contract price;
   c. Premiums for each are to be paid by the General Contractor.

3. Provide an Insurance certificate specifying the City of Cambridge as **Additional Insured,** complying with the Insurance requirements set forth herein in the General Terms and Conditions of the contract, Article 8.

G. Bidder understands that the Owner reserves the right to reject any or all bids and to waive any minor informalities in the bidding prices.

H. Amounts are to be shown in both words and figures. In case of discrepancy, the amount shown in words will govern.

NAME OF BIDDER:_____

File No. 5175 – Bicycle Parking Racks Installation

I. The bidder hereby certifies it shall comply with the minority workforce ratios and specific action contained in the Cambridge Employment Plan, the Cambridge Responsible Employer Plan, the Living Wage Ordinance, the Supplemental Equal Employment Opportunity Program and the Americans with Disabilities Act. The contractor receiving the award of the contract shall be required to obtain from each of its subcontractors and submit to the contracting or administering agency prior to the performance of any work under said contract a certification by said subcontractor, regardless of tier, that it will comply with same.

J. The bidder agrees that this bid shall be good and may not be withdrawn for a period of 90 days after the scheduled closing time for receiving bids.

K. The bid security attached in the sum of _____ _____($_____) is to become the property of the Owner in the event the contract and bond are not executed within the time above set forth, as liquidated damages for the delay and additional expense to the Owner caused thereby.

The undersigned certifies that it possesses the skill, ability and integrity necessary for the faithful performance of the work; that he is able to furnish labor that can work in harmony with all other elements of labor employed or to be employed in the work; that all employees to be employed at the worksite will have successfully completed a course in construction safety and health approved by the United States Occupational Safety and Health Administration that is at least 10 hours in duration at the time the employee begins work and who shall furnish documentation of successful completion of said course with the first certified payroll report for each employee; and who, where the provisions of section 8B of chapter 29 apply, shall have been determined to be qualified thereunder; and who obtains within 10 days of the notification of contract award the security by bond required under section 29 of chapter 149; provided that for the purposes of this section the term "security by bond" shall mean the bond of a surety company qualified to do business under the laws of the commonwealth and satisfactory to the awarding authority.

NAME OF BIDDER:_____

File No. 5175 – Bicycle Parking Racks Installation

The undersigned certifies under penalties of perjury that this bid or proposal has been made and submitted in good faith and without collusion or fraud with any other person. As used in this certification, the "person" shall mean any natural person, business, partnership, corporation, union, committee, club, or other organization, entity, or group or individuals.

"I certify under the penalties of perjury that I have complied with all of the laws of the Commonwealth of Massachusetts relating to taxes, reporting of employees and contractors, and withholding and remitting child support".

The undersigned further certifies under penalty of perjury that the said undersigned is not presently debarred from doing public construction work in the Commonwealth under the provisions of section twenty-nine F of chapter twenty-nine, or any other applicable debarment provision of any other chapter of the General Laws or any rule or regulation promulgated thereunder.

Date_____

BY:_____
(Signature)

_____
(Name of General Bidder)

_____
(Title)

_____
(Business Address)

_____
(City, State and Zip Code)

File No. 5175 – Bicycle Parking Racks Installation

BICYCLE PARKING RACK INSTALLATION CONTRACT

ITEM NO. *	ITEM UNIT BID PRICE WRITTEN IN WORDS	PRICE (EACH)
BR-1	DERO™ "Bike Hitch"(or equivalent) Surface Mount, concrete AT _____ Each	$
BR-2	DERO™ "Bike Hitch" (or equivalent) Surface Mount, brick AT _____ Each	$
BR-3	DERO™ "Bike Hitch" (or equivalent) In-ground Mount, concrete surface AT _____ Each	$
BR-4	DERO™ "Bike Hitch" (or equivalent) In-ground Mount, brick surface AT _____ Each	$
BR-5	DERO™ "Bike Hitch" (or equivalent) In-ground Mount, asphalt or turf surface, requires a concrete footing AT _____ Each	$
BR-6	DERO™ "Bike Hitch" (or equivalent) In-ground Mount, brick surface, requires a concrete footing AT _____ Each	$
BR-7	DERO™ "Swerve" or "Hoop Rack HD" rail-mounted (or equivalent) on concrete surface using six (6) anchor bolts; racks and rails will be pre-assembled. AT _____ Each	$
BR-8	DERO™ "Swerve" or "Hoop Rack HD" rail-mounted (or equivalent) on brick surface using six (6) anchor bolts; racks and rails will be pre-assembled. AT _____ Each	$
BR-10	Removal of existing Surface Mount rack, and patch holes AT _____ Each	$
BR-11	Removal of existing In-ground Mount rack using a metal cutting tool/angle grinder, and patch hole AT _____ Each	$

Grand total amount in words: _____$ _____

File No. 5175 – Bicycle Parking Racks Installation

CITY OF CAMBRIDGE, MASSACHUSETTS

BID BOND

We, the undersigned _____as Principal, and _____, as Surety, are hereby held and firmly bound unto the CITY OF CAMBRIDGE, a municipality in the County of Middlesex and Commonwealth of Massachusetts, in the penal sum of_____ Dollars ($_____), for the payment of which, well and truly to be made. We hereby jointly and severally bind ourselves, our heirs, executors, administrators, successors and assigns.

The condition of the above obligation is such that the Principal has submitted to the City of Cambridge, Massachusetts a certain Bid attached hereto and hereby made a part hereof for the Project described as **Bicycle Parking Racks Installation.**

If the Principal fails to perform their agreement to execute a contract and furnish a performance bond and a labor and materials or payment bond as stated in their bid in accordance with the applicable state statute or fails in all other respects to perform the agreement created by the acceptance of said bid, their bid deposit shall become and be the property of the City of Cambridge as liquidated damages.

If said Bid shall be rejected because of death, disability, bona fide clerical or mechanical error of a substantial nature, or other similar unforeseen circumstances affecting the Principal, their bid bond shall be returned to their.

The Surety, for value received, hereby agrees that its obligations and its bond shall in no way be impaired or affected by an extension of the time in which the City of Cambridge may accept such bid and said Surety does hereby waive notice of any such extension.

IN WITNESS WHEREOF, the Principal and the Surety have set their hands and seals, and such of them as are corporations have caused their corporate seals to be hereto affixed and have caused this bond to be signed by their proper officers on this _____ day of _____ 20___.

_____

SEAL PRINCIPAL

_____

SEAL SURETY

File No. 5175 – Bicycle Parking Racks Installation

STATEMENT OF BIDDER'S QUALIFICATIONS

All questions must be answered and the data given must be clear and comprehensive. If necessary, questions may be answered on separate attached sheets. The Bidder may submit any additional information it desires.

1. The names, titles, residences of all persons and parties interested in this Proposal as principals are as follows:

Note: Give the first and last names in full. In the case of corporation, give names of officers and directors; in the case of a partnership, give names of all partners.

IMPORTANT: Be sure residences are listed below.

Name Title Home Address

_____

_____

_____

_____

_____

_____

2. When organized.

_____

3. If a corporation, where incorporated.

_____

4. How many years have you been engaged in the **Bicycle Parking Racks** business under your present firm or trade name?

_____

_____

5. What projects similar to this one is your organization currently performing? Provide the following information:

Name and Address of Owner for Whom Work is Being Done	Whether Work Being Done as Contractor or Sub-contractor	Description of Work	Approximate Amount of Contract	Approximate Completion Date of Work

_____

_____

_____

_____

_____

_____

NAME OF BIDDER:_____

File No. 5175 – Bicycle Parking Racks Installation

6. The bidder must provide at least two (2) references including telephone number and contact names from at least three locations where they are currently providing the same services. References will be used in determining the responsibility of the bidder. The city reserves the right to use itself as a reference.

_____

_____

_____

7. Has your present organization ever failed to complete any work awarded to it? If so, state when, where, and why.

_____

_____

_____

8. Has your present organization ever defaulted on a contract? If so, state when, where, and why.

_____

_____

_____

9. What project has your present organization completed of character similar to that proposed? Provide the following information:

Name and Address of Owner for Whom Work is Being Done	Whether Work Being Done as Contractor or Sub-contractor	Description of Work	Approximate Amount of Contract	Approximate Completion Date of Work

_____

_____

_____

_____

_____

_____

10. Describe equipment available for the performance of this contract by setting forth make, model and year, size, number, and type for each such piece of equipment (a) owned, (b) currently rented or (c) to be rented. Bidder must set forth description of all equipment it plans to use whether rented or owned.

(a) Owned

_____

_____

_____

_____

NAME OF BIDDER:_____

File No. 5175 – Bicycle Parking Racks Installation

(b) Rented

_____

_____

_____

_____

_____

11. Background and experience of the principal member of your organization, including the officers.

_____

_____

_____

_____

12. Who will be the contractor's on site project manager? State such person's qualifications. Also list names of employees who will be participating in this contract and their qualifications (years of experience, etc.).

_____

_____

_____

13. Give below the name and address of one or more banks that have information that would enable them to advise regarding the financial ability of your company.

Name of Bank Address

_____

14. Employer Identification No.

_____

15. Bidder must provide brief description with a list of contract or projects and clients of the bidder's participation in similar contracts and projects. Provide an explanation of the approach that the bidder would bring to completing the elements described in the Scope of the Work, including any special skills and services and how they are relevant to this project.

_____

_____

_____

16. Signed under the penalties of perjury.

Name_____

Signature_____

Title_____

Date_____

NAME OF BIDDER:_____

File No. 5175 – Bicycle Parking Racks Installation

Chapter 306 of the Acts of 2004
An Act Relative to the Health and Safety on Construction Projects

GENERAL CONTRACTOR'S CERTIFICATION - BID FORM

_____ (Name of General Bidder) hereby certifies that it, and all its subcontractors who are not filed subbidders shall:

(1) who shall certify that all employees to be employed at the worksite will have successfully completed a course in construction safety and health approved by the United States Occupational Safety and Health Administration that is a least 10 hours in duration at the time the employee begins work and who shall furnish documentation of successful completion of said course with the first certified payroll report for each employee.

Signed under the penalties of perjury. _____(date)

_____
Signature of authorized representative of contractor

_____
Print name of authorized representative of contractor

RETURN THIS FORM WITH YOUR BID

File No. 5175 – Bicycle Parking Racks Installation

Chapter 306 of the Acts of 2004
An Act Relative to the Health and Safety on Construction Projects

NON-FILED SUBBIDDERS CERTIFICATION - BID FORM

_____ (Name of Sub Bidder) hereby certifies that it, and all its subcontractors who are not filed subbidders shall:

(1) who shall certify that all employees to be employed at the worksite will have successfully completed a course in construction safety and health approved by the United states Occupational Safety and Health Administration that is a least 10 hours in duration at the time the employee begins work and who shall furnish documentation of successful completion of said course with the first certified payroll report each employee.

Signed under the penalties of perjury. _____(date)

_____
Signature of authorized representative of contractor

_____
Print name of authorized representative of contractor

RETURN THIS FORM WITH YOUR BID

File No. 5175 – Bicycle Parking Racks Installation

CORI COMPLIANCE FORM

Persons and businesses supplying goods and/or services to the City of Cambridge ("Vendors"), who are required by law to perform CORI checks, are further required by Section 2.112.060 of the Cambridge Municipal Code to employ fair policies, practices and standards relating to the screening and identification of persons with criminal backgrounds through the CORI system. Such Vendors, when entering into contracts with the City of Cambridge, must affirm that their policies, practices and standards regarding CORI information are consistent with the policies, practices and standards employed by the City of Cambridge as set forth in the City of Cambridge CORI Policy ("CORI Policy") attached hereto.

CERTIFICATION

The undersigned certifies under penalties of perjury that the Vendor employs CORI related policies, practices and standards that are consistent with the provisions of the attached CORI Policy. **All Vendors must check one of the three lines below**.

1. _____ CORI checks are not performed on any Applicants.

2. _____ CORI checks are performed on some or all Applicants. The Vendor, by affixing a signature below, affirms under penalties of perjury that its CORI policies, practices and standards are consistent with the policies, practices and standards set forth in the attached CORI Policy.

3. _____ CORI checks are performed on some or all Applicants. The Vendor's CORI policies, practices and standards are not consistent with the attached CORI Policy. Please explain on a separate sheet of paper.

_____ (Typed or printed name of person signing quotation, bid or Proposal)

_____ Signature

_____ (Name of Business)

NOTE:
The City Manager, in his sole discretion may grant a waiver to any Vendor on a contract by contract basis.

Instructions for Completing CORI Compliance Form:
A Vendor should not check Line 1 unless it performs NO CORI checks on ANY applicant. A Vendor who checks Line 2 certifies that the Vendor's CORI policy conforms to the policies, practices and standards set forth in the City's CORI Policy. A Vendor with a CORI policy that does NOT conform to the City's CORI Policy must check Line 3 and explain the reasons for its nonconformance in writing. Vendors who check Line 3 will not be permitted to enter into contracts with the City, absent a waiver by the City Manager.

This form must be submitted with your bid.

File No. 5175 – Bicycle Parking Racks Installation

File No. _____

AGREEMENT BETWEEN THE CITY OF CAMBRIDGE
AND
CONTRACTOR

The City of Cambridge ("the City"), a municipal corporation, acting through its City Manager, and

_____("the contractor"),

_____(address)
agree as follows:

THE CONTRACT DOCUMENTS

The Contract Documents form the Contract between the City and the Contractor and consist only of those documents listed under the definition of "Contract Documents" in the General Terms and Conditions of the Contract. The Contract represents the entire and integrated agreement between the parties and supersedes any prior negotiations, representations, or agreements, whether oral or written.

THE WORK

The Contractor shall perform the Work as specified in the Contract Documents entitled:

Bicycle Parking Racks Installation

CONTRACT TIME

The Contract Time shall be shall be in a timely fashion but no more than one year with two one year options to renew commencing on or before seven (7) days following receipt of a written "Notice to Proceed" of the Owner.

CONTRACT SUM

The City will pay the Contractor for performance of the Work in accordance with the Contract Documents the sum of _____ as set forth on the Contractor's bid form.

The City shall not be liable for any claims or requests for payment by the Contractor which would cause the total claims or payments under this Contract to exceed the amount certified by the City Auditor as being appropriated for this Contract.

File No. 5175 – Bicycle Parking Racks Installation

This Contract is effective as of_____, the date the Agreement is signed by the City Manager.

THE CITY OF CAMBRIDGE

_____
Robert W. Healy, City Manager

THE CONTRACTOR

_____
Signature

_____
Print Name and Title

(Corporate Seal)

APPROVED AS TO FORM:

_____
Donald Drisdell, City Solicitor

APPROVED AS TO THE AVAILABILITY
OF APPROPRIATION OF FUNDS:

Budget Code: _____

_____
James D. Monagle City Auditor

_____
Cynthia H. Griffin, Purchasing Agent

File No. 5175 – Bicycle Parking Racks Installation

Payment Bond

We, the undersigned,

_____
(Name of Contractor)

_____
(Address of Contractor)

_____, hereinafter called Principal, and
(Corporation, Partnership, or Individual)

_____(Name of Surety)

_____
(Address of Surety)

hereinafter called Surety, are held and firmly bound unto CITY OF CAMBRIDGE, 795 Massachusetts Avenue, Cambridge, MA 02139, hereinafter called Owner, in the penal sum of
_____ Dollars $(_____) in lawful money of the United States, for the payment of which sum well and truly to be made. We hereby jointly and severally bind ourselves, our heirs, executors, administrators, successors, and assigns.

The condition of this obligation is such that the Principal entered into a certain contract with the Owner, dated the _____ day of _____, 20____, a copy of which is attached hereto and made a part hereof, for the project known as **Bicycle Parking Racks Installation**

Now, therefore, if the Principal shall promptly make payment to all persons, firms, subcontractors, and corporations furnishing materials for or performing labor in the prosecution of the work provided for in such contract, and any authorized extension or modification thereof, including all amounts due for materials used in connection with the work, and all insurance premiums on said work, and for all labor, performed in such work whether by subcontractor or otherwise, then this obligation shall be void; otherwise this bond is remain in full force and effect. Provided, further, that the said Surety for value received hereby agrees that no change, extension of time, alteration or addition to the terms of the contract or to the work to be performed there under of the Specifications accompanying the same shall in any wise affect its obligation on this Bond, and it does hereby waive notice of any such change, extension of time, alteration or addition to the terms of the contract or to the work or to the specifications.

Provided, further, that no final settlement between the Owner and the Contractor shall abridge the right of any beneficiary hereunder, whose claim may be unsatisfied.

File No. 5175 – Bicycle Parking Racks Installation

IN WITNESS WHEREOF, this instrument is executed on this _____day of _____ 20____.

CONTRACTOR AS PRINCIPAL	SURETY
_____	_____
(Signature)	(Signature)
Name and Title:	Name and Title:
SEAL	SEAL

File No. 5175 – Bicycle Parking Racks Installation

MEETING OF THE BOARD OF DIRECTORS
CERTIFICATE OF AUTHORITY

_____20____

At a meeting of the Directors of the _____ duly called and held at _____ on the _____ day of _____, at which a quorum was present and acting, it was

VOICED THAT _____

the _____of this corporation is hereby authorized and empowered to make, enter into, sign, seal and deliver, in behalf of this corporation, **Bicycle Parking Racks Installation**

Contract with the City of Cambridge, and performance and payment bonds (each in the full amount of the Contract) in connection with such Contract.

I DO HEREBY CERTIFY that the above is a true and correct copy of the record, that said vote has not been amended or repealed and is in full force and effect on this date, and that

_____is duly elected _____ of this Corporation.

ATTEST:

_____

Clerk or Secretary of the Corporation

THE COMMONWEALTH OF MASSACHUSETTS
EXECUTIVE OFFICE OF LABOR AND WORKFORCE DEVELOPMENT
DIVISION OF OCCUPATIONAL SAFETY

DEVAL L. PATRICK
Governor

TIMOTHY P. MURRAY
Lieutenant Governor

Prevailing Wage Rates

As determined by the Commissioner under the provisions of the Massachusetts General Laws, Chapter 149, Sections 26 to 27H

JOANNE F. GOLDSTEIN
Secretary of Labor and Workforce Development

GEORGE E. NOEL
Director of Labor

LAURA M. MARLIN
Commissioner of Division of Occupational Safety

Awarding Authority: City of Cambridge Purchasing Department

Contract Number:

City/Town: CAMBRIDGE

Description of Work: BICYCLE PARKING RACKS INSTALLATION; INSTALLATION OF BICYCLE PARKING RACKS ON CITY AND SCHOOL PROPERTY

Job Location: VARIOUS LOCATIONS

Classification	Effective Dates and Total Rates					
Construction						
(2 AXLE) DRIVER - EQUIPMENT	12/01/2009	$44.330	06/01/2010	$44.930	12/01/2010	$45.530
	06/01/2011	$46.280	12/01/2011	$46.940	06/01/2012	$47.590
	12/01/2012	$48.620				
(3 AXLE) DRIVER - EQUIPMENT	12/01/2009	$44.400	06/01/2010	$45.000	12/01/2010	$45.600
	06/01/2011	$46.350	12/01/2011	$47.010	06/01/2012	$47.660
	12/01/2012	$48.690				
(4 & 5 AXLE) DRIVER - EQUIPMENT	12/01/2009	$44.520	06/01/2010	$45.120	12/01/2010	$45.720
	06/01/2011	$46.470	12/01/2011	$47.130	06/01/2012	$47.780
	12/01/2012	$48.810				
ADS/SUBMERSIBLE PILOT	08/01/2009	$101.110	08/01/2010	$104.640	08/01/2011	$108.760
AIR TRACK OPERATOR	12/01/2009	$47.850	06/01/2010	$48.850	12/01/2010	$50.100
	06/01/2011	$51.100	12/01/2011	$52.350		
ASBESTOS REMOVER - PIPE / MECH. EQUIPT.	12/01/2009	$40.250				
ASPHALT RAKER	12/01/2009	$47.350	06/01/2010	$48.350	12/01/2010	$49.600
	06/01/2011	$50.600	12/01/2011	$51.850		
ASPHALT/CONCRETE/CRUSHER PLANT-ON SITE	12/01/2009	$58.530	06/01/2010	$59.780	12/01/2010	$61.030
BACKHOE/FRONT-END LOADER	12/01/2009	$58.530	06/01/2010	$59.780	12/01/2010	$61.030
BARCO-TYPE JUMPING TAMPER	12/01/2009	$47.350	06/01/2010	$48.350	12/01/2010	$49.600
	06/01/2011	$50.600	12/01/2011	$51.850		
BLOCK PAVER, RAMMER / CURB SETTER	12/01/2009	$47.850	06/01/2010	$48.850	12/01/2010	$50.100
	06/01/2011	$51.100	12/01/2011	$52.350		
BOILER MAKER	01/01/2010	$55.850				

APPRENTICE: BOILERMAKER - Local 29

Ratio	Step	1	2	3	4	5	6	7	8
1:5	%	65.00	65.00	70.00	75.00	80.00	85.00	90.00	95.00

Apprentice wages shall be no less than the following:

Step 1$38.75/2$38.75/3$41.19/4$43.64/5$46.08/6$48.53/7$50.97/8$53.42

BRICK/STONE/ARTIFICIAL MASONRY (INCL. MASONRY WATERPROOFING)	02/01/2010	$68.010	08/01/2010	$69.910	02/01/2011	$70.900
	08/01/2011	$73.000	02/01/2012	$73.990		

APPRENTICE: BRICK/PLASTER/CEMENT MASON - Local 3 Boston

Ratio	Step	1	2	3	4	5
1:5	%	50.00	60.00	70.00	80.00	90.00

Apprentice wages shall be no less than the following:

Step 1$45.71/2$50.17/3$54.63/4$59.09/5$63.55

BULLDOZER/GRADER/SCRAPER	12/01/2009	$58.190	06/01/2010	$59.430	12/01/2010	$60.680
CAISSON & UNDERPINNING BOTTOM MAN	12/01/2009	$48.250	06/01/2010	$49.250	12/01/2010	$50.500
	06/01/2011	$51.500	12/01/2011	$52.750		
CAISSON & UNDERPINNING LABORER	12/01/2009	$47.100	06/01/2010	$48.100	12/01/2010	$49.350
	06/01/2011	$50.350	12/01/2011	$51.600		

This wage schedule must be posted at the work site in accordance with M.G.L. c. 149, § 27. Failure of the employer to pay "prevailing wage rates," which are the minimum wage rates listed above, on public works projects is a violation of M.G.L. c. 149, § 27. Employees not receiving such rates should report the violation to the Office of Fair Labor and Business Practices, 100 Cambridge Street, Boston, MA 02108; Tel: 617-727-3465. For any questions about the wage rates or classifications included on the wage schedule, please call DOS at 617-626-6952.

THE COMMONWEALTH OF MASSACHUSETTS
EXECUTIVE OFFICE OF LABOR AND WORKFORCE DEVELOPMENT
DIVISION OF OCCUPATIONAL SAFETY

DEVAL L. PATRICK
Governor

TIMOTHY P. MURRAY
Lieutenant Governor

Prevailing Wage Rates

As determined by the Commissioner under the provisions of the Massachusetts General Laws, Chapter 149, Sections 26 to 27H

JOANNE F. GOLDSTEIN
Secretary of Labor and Workforce Development

GEORGE E. NOEL
Director of Labor

LAURA M. MARLIN
Commissioner of Division of Occupational Safety

Awarding Authority: City of Cambridge Purchasing Department

Contract Number:

City/Town: CAMBRIDGE

Description of Work: BICYCLE PARKING RACKS INSTALLATION; INSTALLATION OF BICYCLE PARKING RACKS ON CITY AND SCHOOL PROPERTY

Job Location: VARIOUS LOCATIONS

Classification	Effective Dates and Total Rates					
CAISSON & UNDERPINNING TOP MAN	12/01/2009	$47.100	06/01/2010	$48.100	12/01/2010	$49.350
	06/01/2011	$50.350	12/01/2011	$51.600		
CARBIDE CORE DRILL OPERATOR	12/01/2009	$47.350	06/01/2010	$48.350	12/01/2010	$49.600
	06/01/2011	$50.600	12/01/2011	$51.850		
CARPENTER	03/01/2010	$59.800	09/01/2010	$60.680	03/01/2011	$61.550
	09/01/2011	$62.680	03/01/2012	$63.800		

APPRENTICE: CARPENTER - Zone 1 Metro Boston

Ratio	Step	1	2	3	4	5	6	7	8
1:5	%	50.00	60.00	70.00	75.00	80.00	80.00	90.00	90.00

Apprentice wages shall be no less than the following:

Step 1$27.90/2$31.60/3$43.98/4$45.83/5$49.25/6$49.25/7$56.10/8$56.10

CEMENT MASONRY/PLASTERING	02/01/2010	$66.200	08/01/2010	$67.670	02/01/2011	$68.440
	08/01/2011	$70.060	02/01/2012	$70.830		
CHAIN SAW OPERATOR	12/01/2009	$47.350	06/01/2010	$48.350	12/01/2010	$49.600
	06/01/2011	$50.600	12/01/2011	$51.850		
CLAM SHELLS/SLURRY BUCKETS/HEADING MACHINES	12/01/2009	$59.530	06/01/2010	$60.780	12/01/2010	$62.030
COMPRESSOR OPERATOR	12/01/2009	$47.890	06/01/2010	$48.810	12/01/2010	$49.740
DELEADER (BRIDGE)	01/01/2010	$63.410				
DEMO: ADZEMAN	12/01/2009	$47.100	06/01/2010	$48.100	12/01/2010	$49.350
	06/01/2011	$50.350	12/01/2011	$51.600		
DEMO: BACKHOE/LOADER/HAMMER OPERATOR	12/01/2009	$48.100	06/01/2010	$49.100	12/01/2010	$50.350
	06/01/2011	$51.350	12/01/2011	$52.600		
DEMO: BURNERS	12/01/2009	$47.850	06/01/2010	$48.850	12/01/2010	$50.100
	06/01/2011	$51.100	12/01/2011	$52.350		
DEMO: CONCRETE CUTTER/SAWYER	12/01/2009	$48.100	06/01/2010	$49.100	12/01/2010	$50.350
	06/01/2011	$51.350	12/01/2011	$52.600		
DEMO: JACKHAMMER OPERATOR	12/01/2009	$47.850	06/01/2010	$48.850	12/01/2010	$50.100
	06/01/2011	$51.100	12/01/2011	$52.350		
DEMO: WRECKING LABORER	12/01/2009	$47.100	06/01/2010	$48.100	12/01/2010	$49.350
	06/01/2011	$50.350	12/01/2011	$51.600		
DIRECTIONAL DRILL MACHINE OPERATOR	12/01/2009	$58.190	06/01/2010	$59.430	12/01/2010	$60.680
DIVER	08/01/2009	$75.090	08/01/2010	$77.440	08/01/2011	$80.190
DIVER TENDER	08/01/2009	$60.220	08/01/2010	$62.570	08/01/2011	$65.320
DIVER TENDER (EFFLUENT)	08/01/2009	$78.810	08/01/2010	$82.330	08/01/2011	$86.460
DIVER/SLURRY (EFFLUENT)	08/01/2009	$101.110	08/01/2010	$104.640	08/01/2011	$108.760
ELECTRICIAN	03/01/2010	$65.790	09/01/2010	$67.030	03/01/2011	$68.270

This wage schedule must be posted at the work site in accordance with M.G.L. c. 149, § 27. Failure of the employer to pay "prevailing wage rates," which are the minimum wage rates listed above, on public works projects is a violation of M.G.L. c. 149, § 27. Employees not receiving such rates should report the violation to the Office of Fair Labor and Business Practices, 100 Cambridge Street, Boston, MA 02108; Tel: 617-727-3465. For any questions about the wage rates or classifications included on the wage schedule, please call DOS at 617-626-6952.

THE COMMONWEALTH OF MASSACHUSETTS
EXECUTIVE OFFICE OF LABOR AND WORKFORCE DEVELOPMENT
DIVISION OF OCCUPATIONAL SAFETY

Prevailing Wage Rates

As determined by the Commissioner under the provisions of the Massachusetts General Laws, Chapter 149, Sections 26 to 27H

DEVAL L. PATRICK
Governor

TIMOTHY P. MURRAY
Lieutenant Governor

JOANNE F. GOLDSTEIN
Secretary of Labor and Workforce Development

GEORGE E. NOEL
Director of Labor

LAURA M. MARLIN
Commissioner of Division of Occupational Safety

Awarding Authority: City of Cambridge Purchasing Department

Contract Number:

City/Town: CAMBRIDGE

Description of Work: BICYCLE PARKING RACKS INSTALLATION; INSTALLATION OF BICYCLE PARKING RACKS ON CITY AND SCHOOL PROPERTY

Job Location: VARIOUS LOCATIONS

Classification	Effective Dates and Total Rates					
APPRENTICE: ELECTRICIAN - Local 103						
Ratio / Step	1	2	3	4	5	6	7	8	9	10
2:3*** %	40.00	40.00	45.00	45.00	50.00	55.00	60.00	65.00	70.00	75.00
Apprentice wages shall be no less than the following Steps:					App Prior 1/1/03; 30/35/40/45/50/55/65/70/75/80					
1$34.88/2$34.88/3$42.31/4$42.31/5$44.45/6$46.58/7$48.72/8$50.85/9$52.99/10$55.12										
ELEVATOR CONSTRUCTOR	01/01/2010	$65.190	01/01/2011	$66.690	01/01/2012	$68.190				
APPRENTICE: ELEVATOR CONSTRUCTOR - Local 4										
Ratio / Step	1	2	3	4	5					
1:1 %	50.00	55.00	65.00	70.00	80.00					
Apprentice rates shall be no less than the following:					Steps 1-2 are 6 mos.; Steps 3-5 are 1 year					
Step 1$44.47/2$46.89/3$51.73/4$54.17/5$58.99										
ELEVATOR CONSTRUCTOR HELPER	01/01/2010	$51.330	01/01/2011	$52.830	01/01/2012	$54.330				
FENCE & GUARD RAIL ERECTOR	12/01/2009	$47.350	06/01/2010	$48.350	12/01/2010	$49.600				
	06/01/2011	$50.600	12/01/2011	$51.850						
FIELD ENG. - INST. PERSON (BLDG, SITE, HVY CONST)	05/01/2010	$56.950	11/01/2010	$58.190	05/01/2011	$59.430				
FIELD ENG. - ROD PERSON (BLDG, SITE, HVY CONST)	05/01/2010	$41.520	11/01/2010	$42.250	05/01/2011	$42.980				
FIELD ENG.-CHIEF OF PARTY (BLDG, SITE, HVY CONST)	05/01/2010	$58.320	11/01/2010	$59.570	05/01/2011	$60.820				
FIRE ALARM INSTALLER	03/01/2010	$65.790	09/01/2010	$67.030	03/01/2011	$68.270				
FIRE ALARM REPAIR / MAINTENANCE	03/01/2010	$53.800	09/01/2010	$54.730	03/01/2011	$55.660				
FIREMAN (ASST. ENGINEER)	12/01/2009	$52.740	06/01/2010	$53.810	12/01/2010	$54.890				
FLAGGER & SIGNALER	12/01/2009	$36.300	06/01/2010	$37.300	12/01/2010	$37.300				
	06/01/2011	$38.300	12/01/2011	$38.300						
FLOORCOVERER	03/01/2010	$59.630	09/01/2010	$60.380	03/01/2011	$61.130				
	09/01/2011	$62.380	03/01/2012	$63.630						
APPRENTICE: FLOORCOVERER - Local 2168 Zone I										
Ratio / Step	1	2	3	4	5	6	7	8		
1:1 %	50.00	55.00	60.00	65.00	70.00	75.00	80.00	85.00		
Apprentice rates shall be no less than the following:					Steps are 750 hrs.					
Step 1$27.35/2$29.13/3$39.93/4$41.71/5$45.32/6$47.10/7$50.69/8$52.47										
FORK LIFT/CHERRY PICKER	12/01/2009	$58.530	06/01/2010	$59.780	12/01/2010	$61.030				
GENERATOR/LIGHTING PLANT/HEATERS	12/01/2009	$47.890	06/01/2010	$48.810	12/01/2010	$49.740				
GLAZIER (GLASS PLANK/AIR BARRIER/INTERIOR SYSTEMS)	01/01/2010	$58.700								
APPRENTICE: GLAZIER - Local 35 Zone 1										
Ratio / Step	1	2	3	4	5	6	7	8		
1:1 %	50.00	55.00	60.00	65.00	70.00	75.00	80.00	90.00		
Apprentice rates shall be no less than the following:					Steps are 750 hrs.					
Step 1$26.95/2$31.84/3$34.02/4$36.21/5$45.59/6$47.78/7$49.96/8$54.33										
HOISTING ENGINEER/CRANES/GRADALLS	12/01/2009	$58.530	06/01/2010	$59.780	12/01/2010	$61.030				

This wage schedule must be posted at the work site in accordance with M.G.L. c. 149, § 27. Failure of the employer to pay "prevailing wage rates," which are the minimum wage rates listed above, on public works projects is a violation of M.G.L. c. 149, § 27. Employees not receiving such rates should report the violation to the Office of Fair Labor and Business Practices, 100 Cambridge Street, Boston, MA 02108; Tel: 617-727-3465. For any questions about the wage rates or classifications included on the wage schedule, please call DOS at 617-626-6952.

THE COMMONWEALTH OF MASSACHUSETTS
EXECUTIVE OFFICE OF LABOR AND WORKFORCE DEVELOPMENT
DIVISION OF OCCUPATIONAL SAFETY

DEVAL L. PATRICK
Governor

TIMOTHY P. MURRAY
Lieutenant Governor

Prevailing Wage Rates

As determined by the Commissioner under the provisions of the Massachusetts General Laws, Chapter 149, Sections 26 to 27H

JOANNE F. GOLDSTEIN
Secretary of Labor and Workforce Development

GEORGE E. NOEL
Director of Labor

LAURA M. MARLIN
Commissioner of Division of Occupational Safety

Awarding Authority: City of Cambridge Purchasing Department

Contract Number:

City/Town: CAMBRIDGE

Description of Work: BICYCLE PARKING RACKS INSTALLATION; INSTALLATION OF BICYCLE PARKING RACKS ON CITY AND SCHOOL PROPERTY

Job Location: VARIOUS LOCATIONS

Classification	Effective Dates and Total Rates					
APPRENTICE: HOIST/PORT. ENG.- Local 4						
Ratio / Step / 1 / 2 / 3 / 4 / 5 / 6 / 7 / 8						
1:6 / % / 55.00 / 60.00 / 65.00 / 70.00 / 75.00 / 80.00 / 85.00 / 90.00						
Apprentice wages shall be no less than the following:						
Step 1$29.83/2$43.42/3$45.31/4$47.20/5$49.09/6$50.97/7$52.86/8$54.74						
HVAC (DUCTWORK)	02/01/2010	$63.470	08/01/2010	$64.720	02/01/2011	$65.970
	08/01/2011	$67.220	02/01/2012	$68.470	08/01/2012	$69.720
	02/01/2013	$70.970				
HVAC (ELECTRICAL CONTROLS)	03/01/2010	$65.790	09/01/2010	$67.030	03/01/2011	$68.270
HVAC (TESTING AND BALANCING - AIR)	02/01/2010	$63.470	08/01/2010	$64.720	02/01/2011	$65.970
	08/01/2011	$67.220	02/01/2012	$68.470	08/01/2012	$69.720
	02/01/2013	$70.970				
HVAC (TESTING AND BALANCING -WATER)	03/01/2010	$68.730				
HVAC MECHANIC	03/01/2010	$68.730				
HYDRAULIC DRILLS	12/01/2009	$47.850	06/01/2010	$48.850	12/01/2010	$50.100
	06/01/2011	$51.100	12/01/2011	$52.350		
INSULATOR (PIPES & TANKS)	09/01/2009	$59.260	09/01/2010	$61.660		
APPRENTICE: ASBESTOS INSULATOR (Pipes & Tanks) - Local 6 Boston						
Ratio / Step / 1 / 2 / 3 / 4						
1:4 / % / 50.00 / 60.00 / 70.00 / 80.00						
Apprentice wages shall be no less than the following:	Steps are 1 year					
Step 1$36.64/2$41.16/3$45.69/4$50.21						
IRONWORKER/WELDER	03/16/2010	$60.940				
APPRENTICE: IRONWORKER - Local 7 Boston						
Ratio / Step / 1 / 2 / 3 / 4 / 5 / 6						
** / % / 60.00 / 70.00 / 75.00 / 80.00 / 85.00 / 90.00						
Apprentice wages shall be no less than the following:	** Structural 1:6; Ornamental 1:4					
Step 1$46.82/2$50.35/3$52.12/4$53.88/5$55.65/6$57.41						
JACKHAMMER & PAVING BREAKER OPERATOR	12/01/2009	$47.350	06/01/2010	$48.350	12/01/2010	$49.600
	06/01/2011	$50.600	12/01/2011	$51.850		
LABORER	12/01/2009	$47.100	06/01/2010	$48.100	12/01/2010	$49.350
	06/01/2011	$50.350	12/01/2011	$51.600		
APPRENTICE: LABORER - Zone 1						
Ratio / Step / 1 / 2 / 3 / 4						
1:5 / % / 60.00 / 70.00 / 80.00 / 90.00						
Apprentice wages shall be no less than the following:						
Step 1$36.88/2$39.81/3$42.74/4$45.67						
LABORER: CARPENTER TENDER	12/01/2009	$47.100	06/01/2010	$48.100	12/01/2010	$49.350
	06/01/2011	$50.350	12/01/2011	$51.600		

This wage schedule must be posted at the work site in accordance with M.G.L. c. 149, § 27. Failure of the employer to pay "prevailing wage rates," which are the minimum wage rates listed above, on public works projects is a violation of M.G.L. c. 149, § 27. Employees not receiving such rates should report the violation to the Office of Fair Labor and Business Practices, 100 Cambridge Street, Boston, MA 02108; Tel: 617-727-3465. For any questions about the wage rates or classifications included on the wage schedule, please call DOS at 617-626-6952.

THE COMMONWEALTH OF MASSACHUSETTS
EXECUTIVE OFFICE OF LABOR AND WORKFORCE DEVELOPMENT
DIVISION OF OCCUPATIONAL SAFETY

DEVAL L. PATRICK
Governor

TIMOTHY P. MURRAY
Lieutenant Governor

Prevailing Wage Rates

As determined by the Commissioner under the provisions of the Massachusetts General Laws, Chapter 149, Sections 26 to 27H

JOANNE F. GOLDSTEIN
Secretary of Labor and Workforce Development

GEORGE E. NOEL
Director of Labor

LAURA M. MARLIN
Commissioner of Division of Occupational Safety

Awarding Authority: City of Cambridge Purchasing Department

Contract Number:

City/Town: CAMBRIDGE

Description of Work: BICYCLE PARKING RACKS INSTALLATION; INSTALLATION OF BICYCLE PARKING RACKS ON CITY AND SCHOOL PROPERTY

Job Location: VARIOUS LOCATIONS

Classification	Effective Dates and Total Rates					
LABORER: CEMENT FINISHER TENDER	12/01/2009	$47.100	06/01/2010	$48.100	12/01/2010	$49.350
	06/01/2011	$50.350	12/01/2011	$51.600		
LABORER: HAZARDOUS WASTE/ASBESTOS REMOVER	12/01/2009	$47.100	06/01/2010	$48.100	12/01/2010	$49.350
	06/01/2011	$50.350	12/01/2011	$51.600		
LABORER: MASON TENDER	12/01/2009	$47.350	06/01/2010	$48.350	12/01/2010	$49.600
	06/01/2011	$50.600	12/01/2011	$51.850		
LABORER: MULTI-TRADE TENDER	12/01/2009	$47.100	06/01/2010	$48.100	12/01/2010	$49.350
	06/01/2011	$50.350	12/01/2011	$51.600		
LABORER: TREE REMOVER	12/01/2009	$47.100	06/01/2010	$48.100	12/01/2010	$49.350
	06/01/2011	$50.350	12/01/2011	$51.600		

This classification applies to the wholesale removal
of standing trees including all associated trimming of branches and limbs, and applies to the removal of branches at locations not on or around utility lines.

LASER BEAM OPERATOR	12/01/2009	$47.350	06/01/2010	$48.350	12/01/2010	$49.600
	06/01/2011	$50.600	12/01/2011	$51.850		
MARBLE & TILE FINISHERS	02/01/2010	$56.950	08/01/2010	$58.470	02/01/2011	$59.270
	08/01/2011	$60.950	02/01/2012	$61.740		

APPRENTICE: MARBLE & TILE FINISHER - Local 3 Marble & Tile

Ratio	Step	1	2	3	4	5
1:3	%	50.00	60.00	70.00	80.00	90.00

Apprentice wages shall be no less than the following: Steps are 800 hrs.

Step 1$39.66/2$43.11/3$46.57/4$50.03/5$53.49

MARBLE MASONS,TILELAYERS & TERRAZZO MECH	02/01/2010	$68.050	08/01/2010	$69.950	02/01/2011	$70.940
	08/01/2011	$73.040	02/01/2012	$74.030		

APPRENTICE: MARBLE-TILE-TERRAZZO MECHANIC - Local 3 Marble & Tile

Ratio	Step	1	2	3	4	5
1:3	%	50.00	60.00	70.00	80.00	90.00

Apprentice wages shall be no less than the following:

Step 1$45.73/2$50.19/3$54.66/4$59.12/5$63.59

MECH. SWEEPER OPERATOR (NON-CONSTRUCTION)	07/01/2009	$28.890	07/01/2010	$29.590	07/01/2011	$30.290
MECH. SWEEPER OPERATOR (ON CONST. SITES)	12/01/2009	$58.190	06/01/2010	$59.430	12/01/2010	$60.680
MECHANICS MAINTENANCE	12/01/2009	$58.190	06/01/2010	$59.430	12/01/2010	$60.680
MILLWRIGHT (Zone 1)	04/01/2010	$55.850				

APPRENTICE: MILLWRIGHT - Local 1121 Zone 1

Ratio	Step	1	2	3	4	5	6	7	8
1:5	%	50.00	55.00	60.00	65.00	70.00	75.00	80.00	85.00

Apprentice wages shall be no less than the following:

Step 1$34.63/2$36.31/3$39.44/4$41.12/5$44.26/6$45.94/7$47.65/8$49.32

MORTAR MIXER	12/01/2009	$47.350	06/01/2010	$48.350	12/01/2010	$49.600
	06/01/2011	$50.600	12/01/2011	$51.850		
OILER (OTHER THAN TRUCK CRANES,GRADALLS)	12/01/2009	$41.750	06/01/2010	$42.480	12/01/2010	$43.220

This wage schedule must be posted at the work site in accordance with M.G.L. c. 149, § 27. Failure of the employer to pay "prevailing wage rates," which are the minimum wage rates listed above, on public works projects is a violation of M.G.L. c. 149, § 27. Employees not receiving such rates should report the violation to the Office of Fair Labor and Business Practices, 100 Cambridge Street, Boston, MA 02108; Tel: 617-727-3465. For any questions about the wage rates or classifications included on the wage schedule, please call DOS at 617-626-6952.

THE COMMONWEALTH OF MASSACHUSETTS
EXECUTIVE OFFICE OF LABOR AND WORKFORCE DEVELOPMENT
DIVISION OF OCCUPATIONAL SAFETY

DEVAL L. PATRICK
Governor

TIMOTHY P. MURRAY
Lieutenant Governor

Prevailing Wage Rates

As determined by the Commissioner under the provisions of the Massachusetts General Laws, Chapter 149, Sections 26 to 27H

JOANNE F. GOLDSTEIN
Secretary of Labor and Workforce Development

GEORGE E. NOEL
Director of Labor

LAURA M. MARLIN
Commissioner of Division of Occupational Safety

Awarding Authority: City of Cambridge Purchasing Department

Contract Number:

City/Town: CAMBRIDGE

Description of Work: BICYCLE PARKING RACKS INSTALLATION; INSTALLATION OF BICYCLE PARKING RACKS ON CITY AND SCHOOL PROPERTY

Job Location: VARIOUS LOCATIONS

Classification	Effective Dates and Total Rates					
OILER (TRUCK CRANES, GRADALLS)	12/01/2009	$44.720	06/01/2010	$45.550	12/01/2010	$46.380
OTHER POWER DRIVEN EQUIPMENT - CLASS II	12/01/2009	$58.190	06/01/2010	$59.430	12/01/2010	$60.680
PAINTER (BRIDGES/TANKS)	01/01/2010	$63.410				

APPRENTICE: PAINTER Local 35 - BRIDGES/TANKS

Ratio	Step	1	2	3	4	5	6	7	8
1:1	%	50.00	55.00	60.00	65.00	70.00	75.00	80.00	90.00

Apprentice wages shall be no less than the following: Steps are 750 hrs.

Step 1$29.31/2$34.43/3$36.85/4$39.27/5$48.89/6$51.31/7$53.73/8$58.57

PAINTER (SPRAY OR SANDBLAST, NEW) * 01/01/2010 $60.100

* If 30% or more of surfaces to be painted are new construction, NEW paint rate shall be used.

APPRENTICE: PAINTER Local 35 Zone 1 - Spray/Sandblast - New

Ratio	Step	1	2	3	4	5	6	7	8
1:1	%	50.00	55.00	60.00	65.00	70.00	75.00	80.00	90.00

Apprentice wages shall be no less than the following:

Step1 $27.65/2$25.25/3$37.22/4$39.05/5$48.19/6$50.18/7$52.16/8$56.13

PAINTER (SPRAY OR SANDBLAST, REPAINT) 01/01/2010 $58.160

APPRENTICE: PAINTER Local 35 Zone 1 - Spray/Sandblast - Repaint

Ratio	Step	1	2	3	4	5	6	7	8
1:1	%	50.00	55.00	60.00	65.00	70.00	75.00	80.00	90.00

Apprentice wages shall be no less than the following:

Step 1$26.68/2$33.97/3$35.86/4$37.74/5$46.83/6$48.72/7$50.61/8$54.38

PAINTER (TRAFFIC MARKINGS)	12/01/2009	$47.100	06/01/2010	$48.100	12/01/2010	$49.350
	06/01/2011	$50.350	12/01/2011	$51.600		

PAINTER / TAPER (BRUSH, NEW) * 01/01/2010 $58.700

* If 30% or more of surfaces to be painted are new construction, NEW paint rate shall be used.

APPRENTICE: PAINTER - Local 35 Zone 1 - BRUSH NEW

Ratio	Step	1	2	3	4	5	6	7	8
1:1	%	50.00	55.00	60.00	65.00	70.00	75.00	80.00	90.00

Apprentice wages shall be no less than the following: Steps are 750 hrs.

Step 1$26.95/2$31.84/3$34.02/4$36.21/5$45.59/6$47.78/7$49.96/8$54.33

PAINTER / TAPER (BRUSH, REPAINT) 01/01/2010 $56.760

APPRENTICE: PAINTER Local 35 Zone 1 - BRUSH REPAINT

Ratio	Step	1	2	3	4	5	6	7	8
1:1	%	50.00	55.00	60.00	65.00	70.00	75.00	80.00	90.00

Apprentice wages shall be no less than the following: Steps are 750 hrs.

Step 1$25.98/2$30.77/3$32.86/4$34.94/5$44.23/6$46.32/7$48.41/8$52.58

This wage schedule must be posted at the work site in accordance with M.G.L. c. 149, § 27. Failure of the employer to pay "prevailing wage rates," which are the minimum wage rates listed above, on public works projects is a violation of M.G.L. c. 149, § 27. Employees not receiving such rates should report the violation to the Office of Fair Labor and Business Practices, 100 Cambridge Street, Boston, MA 02108; Tel: 617-727-3465. For any questions about the wage rates or classifications included on the wage schedule, please call DOS at 617-626-6952.

THE COMMONWEALTH OF MASSACHUSETTS
EXECUTIVE OFFICE OF LABOR AND WORKFORCE DEVELOPMENT
DIVISION OF OCCUPATIONAL SAFETY

DEVAL L. PATRICK
Governor

TIMOTHY P. MURRAY
Lieutenant Governor

Prevailing Wage Rates

As determined by the Commissioner under the provisions of the Massachusetts General Laws, Chapter 149, Sections 26 to 27H

JOANNE F. GOLDSTEIN
Secretary of Labor and Workforce Development

GEORGE E. NOEL
Director of Labor

LAURA M. MARLIN
Commissioner of Division of Occupational Safety

Awarding Authority: City of Cambridge Purchasing Department

Contract Number:

City/Town: CAMBRIDGE

Description of Work: BICYCLE PARKING RACKS INSTALLATION; INSTALLATION OF BICYCLE PARKING RACKS ON CITY AND SCHOOL PROPERTY

Job Location: VARIOUS LOCATIONS

Classification	Effective Dates and Total Rates					
PANEL & PICKUP TRUCKS DRIVER	12/01/2009	$44.160	06/01/2010	$44.760	12/01/2010	$45.360
	06/01/2011	$46.110	12/01/2011	$46.770	06/01/2012	$47.420
	12/01/2012	$48.450				
PIER AND DOCK CONSTRUCTOR (UNDERPINNING AND DECK)	08/01/2009	$60.220	08/01/2010	$62.570	08/01/2011	$65.320
PILE DRIVER	08/01/2009	$60.220	08/01/2010	$62.570	08/01/2011	$65.320

APPRENTICE: PILE DRIVER - Local 56 Zone 1

Ratio	Step	1	2	3	4	5	6	7	8
1:3	%	60.00	65.00	70.00	75.00	80.00	85.00	90.00	95.00

Apprentice wages shall be no less than the following:

Step 1$45.35/2$47.21/3$49.07/4$50.93/5$52.79/6$54.64/7$56.50/8$58.36

PIPEFITTER & STEAMFITTER	03/01/2010	$68.730

APPRENTICE: PIPEFITTER - Local 537

Ratio	Step	1	2	3	4	5
**	%	40.00	45.00	60.00	70.00	80.00

Apprentice Rates-Step1$33.94/2$43.38/3$50.29/4$54.90/5$59.51 ** 1:3; 3:15; 1:10 thereafter / Steps are 1 yr.

Refrig/AC Mechanic **1:1;1:2;2:4;3:6;4:8;5:10;6:12;7:14;8:17;9:20;10:23(Max)

PIPELAYER	12/01/2009	$47.350	06/01/2010	$48.350	12/01/2010	$49.600
	06/01/2011	$50.600	12/01/2011	$51.850		
PLUMBERS & GASFITTERS	03/01/2010	$67.500				

APPRENTICE: PLUMBER - Local 12

Ratio	Step	1	2	3	4	5
**	%	35.00	40.00	55.00	65.00	75.00

Apprentice wages shall be no less than the following: ** 1:2; 2:6; 3:10; 4:14; 5:19/Steps are 1 yr

Step 1$30.03/2$32.90/3$41.57/4$47.32/ 4w/lic$50.20 /5$53.07/ 5w/lic$55.98

PNEUMATIC CONTROLS (TEMP.)	03/01/2010	$68.730				
PNEUMATIC DRILL/TOOL OPERATOR	12/01/2009	$47.350	06/01/2010	$48.350	12/01/2010	$49.600
	06/01/2011	$50.600	12/01/2011	$51.850		
POWDERMAN & BLASTER	12/01/2009	$48.100	06/01/2010	$49.100	12/01/2010	$50.350
	06/01/2011	$51.350	12/01/2011	$52.600		
POWER SHOVEL/DERRICK/TRENCHING MACHINE	12/01/2009	$58.530	06/01/2010	$59.780	12/01/2010	$61.030
PUMP OPERATOR (CONCRETE)	12/01/2009	$58.530	06/01/2010	$59.780	12/01/2010	$61.030
PUMP OPERATOR (DEWATERING, OTHER)	12/01/2009	$47.890	06/01/2010	$48.810	12/01/2010	$49.740
READY-MIX CONCRETE DRIVER	05/01/2010	$43.040	05/01/2011	$43.650		
RECLAIMERS	12/01/2009	$58.190	06/01/2010	$59.430	12/01/2010	$60.680
RESIDENTIAL WOOD FRAME CARPENTER **	04/01/2009	$38.870				

** The Residential Wood Frame Carpenter classification applies only to the construction of new, wood frame residences that do not exceed four stories including the basement.

As of 9/1/09 Carpentry work on wood-frame residential WEATHERIZATION projects shall be paid the RESIDENTIAL WOOD FRAME CARPENTER rate.

This wage schedule must be posted at the work site in accordance with M.G.L. c. 149, § 27. Failure of the employer to pay "prevailing wage rates," which are the minimum wage rates listed above, on public works projects is a violation of M.G.L. c. 149, § 27. Employees not receiving such rates should report the violation to the Office of Fair Labor and Business Practices, 100 Cambridge Street, Boston, MA 02108; Tel: 617-727-3465. For any questions about the wage rates or classifications included on the wage schedule, please call DOS at 617-626-6952.

THE COMMONWEALTH OF MASSACHUSETTS
EXECUTIVE OFFICE OF LABOR AND WORKFORCE DEVELOPMENT
DIVISION OF OCCUPATIONAL SAFETY

DEVAL L. PATRICK
Governor

TIMOTHY P. MURRAY
Lieutenant Governor

Prevailing Wage Rates

As determined by the Commissioner under the provisions of the Massachusetts General Laws, Chapter 149, Sections 26 to 27H

JOANNE F. GOLDSTEIN
Secretary of Labor and Workforce Development

GEORGE E. NOEL
Director of Labor

LAURA M. MARLIN
Commissioner of Division of Occupational Safety

Awarding Authority: City of Cambridge Purchasing Department

Contract Number:

City/Town: CAMBRIDGE

Description of Work: BICYCLE PARKING RACKS INSTALLATION; INSTALLATION OF BICYCLE PARKING RACKS ON CITY AND SCHOOL PROPERTY

Job Location: VARIOUS LOCATIONS

Classification	Effective Dates and Total Rates					
APPRENTICE: CARPENTER (Residential Wood Frame) - Zone 1						
Ratio / Step / 1 / 2 / 3 / 4 / 5 / 6 / 7 / 8						
1:5 / % / 60.00 / 60.00 / 65.00 / 70.00 / 75.00 / 80.00 / 85.00 / 90.00						
Apprentice wages shall be no less than the following:						
Step 1$22.08/2$27.99/3$29.35/4$30.71/5$32.07/6$33.43/7$34.79/8$36.15						
RIDE-ON MOTORIZED BUGGY OPERATOR	12/01/2009	$47.350	06/01/2010	$48.350	12/01/2010	$49.600
	06/01/2011	$50.600	12/01/2011	$51.850		
ROLLER/SPREADER/MULCHING MACHINE	12/01/2009	$58.190	06/01/2010	$59.430	12/01/2010	$60.680
ROOFER (Inc.Roofer Waterproofing &Roofer Damproofg)	02/01/2009	$53.860				
APPRENTICE: ROOFER - Local 33						
Ratio / Step / 1 / 2 / 3 / 4 / 5						
** / % / 50.00 / 60.00 / 65.00 / 75.00 / 85.00						
** 1:5, 2:6-10, the 1:10; Reroofing: 1:4, then 1:1	Step 1 is 2000 hrs.; Steps 2-5 are 1000 hrs.					
Apprentice rates no less than: Step 1$34.48/2$40.86/3$42.58/4$46.02/5$49.50						
SHEETMETAL WORKER	02/01/2010	$63.470	08/01/2010	$64.720	02/01/2011	$65.970
	08/01/2011	$67.220	02/01/2012	$68.470	08/01/2012	$69.720
	02/01/2013	$70.970				
APPRENTICE: SHEET METAL WORKER - Local 17-A						
Ratio / Step / 1 / 2 / 3 / 4 / 5 / 6 / 7						
1:4 / % / 40.00 / 45.00 / 50.00 / 60.00 / 65.00 / 75.00 / 85.00						
Apprentice wages shall be no less than the following:	Steps 1-3 are 1 year; Steps 4-7 are 6 mos.					
Step 1$15.75/2$26.51/3$35.36/4$37.38/5$46.40/6$55.63						
SIGN ERECTOR	06/01/2009	$37.780				
APPRENTICE: SIGN ERECTOR - Local 35 Zone 1						
Ratio / Step / 1 / 2 / 3 / 4 / 5 / 6 / 7 / 8 / 9						
1:1 / % / 50.00 / 55.00 / 60.00 / 65.00 / 70.00 / 75.00 / 80.00 / 85.00 / 90.00						
	Steps are 4 mos.					
SLATE / TILE / PRECAST CONCRETE ROOFER	02/01/2009	$54.110				
SPECIALIZED EARTH MOVING EQUIP < 35 TONS	12/01/2009	$44.620	06/01/2010	$45.220	12/01/2010	$45.820
	06/01/2011	$46.570	12/01/2011	$47.230	06/01/2012	$47.880
	12/01/2012	$48.910				
SPECIALIZED EARTH MOVING EQUIP > 35 TONS	12/01/2009	$44.910	06/01/2010	$45.510	12/01/2010	$46.110
	06/01/2011	$46.860	12/01/2011	$47.520	06/01/2012	$48.170
	12/01/2012	$49.200				
SPRINKLER FITTER	04/01/2010	$69.550				

This wage schedule must be posted at the work site in accordance with M.G.L. c. 149, § 27. Failure of the employer to pay "prevailing wage rates," which are the minimum wage rates listed above, on public works projects is a violation of M.G.L. c. 149, § 27. Employees not receiving such rates should report the violation to the Office of Fair Labor and Business Practices, 100 Cambridge Street, Boston, MA 02108; Tel: 617-727-3465. For any questions about the wage rates or classifications included on the wage schedule, please call DOS at 617-626-6952.

THE COMMONWEALTH OF MASSACHUSETTS
EXECUTIVE OFFICE OF LABOR AND WORKFORCE DEVELOPMENT
DIVISION OF OCCUPATIONAL SAFETY

DEVAL L. PATRICK
Governor

TIMOTHY P. MURRAY
Lieutenant Governor

Prevailing Wage Rates

As determined by the Commissioner under the provisions of the Massachusetts General Laws, Chapter 149, Sections 26 to 27H

JOANNE F. GOLDSTEIN
Secretary of Labor and Workforce Development

GEORGE E. NOEL
Director of Labor

LAURA M. MARLIN
Commissioner of Division of Occupational Safety

Awarding Authority: City of Cambridge Purchasing Department

Contract Number:

City/Town: CAMBRIDGE

Description of Work: BICYCLE PARKING RACKS INSTALLATION; INSTALLATION OF BICYCLE PARKING RACKS ON CITY AND SCHOOL PROPERTY

Job Location: VARIOUS LOCATIONS

Classification	Effective Dates and Total Rates					
APPRENTICE: SPRINKLER FITTER - Local 550						

Ratio	Step	1	2	3	4	5	6	7	8	9	10
1:1	%	40.00	45.00	50.00	55.00	60.00	65.00	70.00	75.00	80.00	85.00

Apprentice wages shall be no less than the following steps:

1$35.04/2$37.82/3$40.60/4$43.38/5$46.16/6$48.94/7$51.72/8$54.50/9$57.28/10$60.06

STEAM BOILER OPERATOR	12/01/2009	$58.190	06/01/2010	$59.430	12/01/2010	$60.680
TAMPERS, SELF-PROPELLED OR TRACTOR DRAWN	12/01/2009	$58.190	06/01/2010	$59.430	12/01/2010	$60.680
TELECOMMUNICATION TECHNICIAN	03/01/2010	$53.800	09/01/2010	$54.730	03/01/2011	$55.660

APPRENTICE: TELECOMMUNICATION TECHNICIAN - Local 103

Ratio	Step	1	2	3	4	5	6	7	8
1:1	%	40.00	45.00	50.00	55.00	60.00	65.00	75.00	80.00

Apprentice wages shall be no less than the following:

Step 1$34.59/2$36.19/3$37.80/4$39.39/5$40.99/6$42.60/7$45.80/8$47.40

TERRAZZO FINISHERS	02/01/2010	$66.950	08/01/2010	$68.850	02/01/2011	$69.840
	08/01/2011	$71.940	02/01/2012	$72.930		

APPRENTICE: TERRAZZO FINISHER - Local 3 Marble & Tile

Ratio	Step	1	2	3	4	5
1:3	%	50.00	60.00	70.00	80.00	90.00

Apprentice wages shall be no less than the following: Steps are 800 hrs.

Step 1$45.18/2$49.53/3$53.89/4$58.24/5$62.60

TEST BORING DRILLER	12/01/2009	$48.500	06/01/2010	$49.500	12/01/2010	$50.750
	06/01/2011	$51.750	12/01/2011	$53.000		
TEST BORING DRILLER HELPER	12/01/2009	$47.220	06/01/2010	$48.220	12/01/2010	$49.470
	06/01/2011	$50.470	12/01/2011	$51.720		
TEST BORING LABORER	12/01/2009	$47.100	06/01/2010	$48.100	12/01/2010	$49.350
	06/01/2011	$50.350	12/01/2011	$51.600		
TRACTORS/PORTABLE STEAM GENERATORS	12/01/2009	$58.190	06/01/2010	$59.430	12/01/2010	$60.680
TRAILERS FOR EARTH MOVING EQUIPMENT	12/01/2009	$45.200	06/01/2010	$45.800	12/01/2010	$46.400
	06/01/2011	$47.150	12/01/2011	$47.810	06/01/2012	$48.460
	12/01/2012	$49.490				
TUNNEL WORK - COMPRESSED AIR	12/01/2009	$59.430	06/01/2010	$60.680	12/01/2010	$61.930
	06/01/2011	$63.180	12/01/2011	$64.430		
TUNNEL WORK - COMPRESSED AIR (HAZ. WASTE)	12/01/2009	$61.430	06/01/2010	$62.680	12/01/2010	$63.930
	06/01/2011	$65.180	12/01/2011	$66.430		
TUNNEL WORK - FREE AIR	12/01/2009	$51.500	06/01/2010	$52.750	12/01/2010	$54.000
	06/01/2011	$55.250	12/01/2011	$56.500		
TUNNEL WORK - FREE AIR (HAZ. WASTE)	12/01/2009	$53.500	06/01/2010	$54.750	12/01/2010	$56.000
	06/01/2011	$57.250	12/01/2011	$58.500		

This wage schedule must be posted at the work site in accordance with M.G.L. c. 149, § 27. Failure of the employer to pay "prevailing wage rates," which are the minimum wage rates listed above, on public works projects is a violation of M.G.L. c. 149, § 27. Employees not receiving such rates should report the violation to the Office of Fair Labor and Business Practices, 100 Cambridge Street, Boston, MA 02108; Tel: 617-727-3465. For any questions about the wage rates or classifications included on the wage schedule, please call DOS at 617-626-6952.

THE COMMONWEALTH OF MASSACHUSETTS
EXECUTIVE OFFICE OF LABOR AND WORKFORCE DEVELOPMENT
DIVISION OF OCCUPATIONAL SAFETY

DEVAL L. PATRICK
Governor

TIMOTHY P. MURRAY
Lieutenant Governor

Prevailing Wage Rates

As determined by the Commissioner under the provisions of the Massachusetts General Laws, Chapter 149, Sections 26 to 27H

JOANNE F. GOLDSTEIN
Secretary of Labor and Workforce Development

GEORGE E. NOEL
Director of Labor

LAURA M. MARLIN
Commissioner of Division of Occupational Safety

Awarding Authority: City of Cambridge Purchasing Department

Contract Number:

City/Town: CAMBRIDGE

Description of Work: BICYCLE PARKING RACKS INSTALLATION; INSTALLATION OF BICYCLE PARKING RACKS ON CITY AND SCHOOL PROPERTY

Job Location: VARIOUS LOCATIONS

Classification	Effective Dates and Total Rates					
VAC-HAUL	12/01/2009	$44.620	06/01/2010	$45.220	12/01/2010	$45.820
	06/01/2011	$46.570	12/01/2011	$47.230	06/01/2012	$47.880
	12/01/2012	$48.910				
WAGON DRILL OPERATOR	12/01/2009	$47.350	06/01/2010	$48.350	12/01/2010	$49.600
	06/01/2011	$50.600	12/01/2011	$51.850		
WASTE WATER PUMP OPERATOR	12/01/2009	$58.530	06/01/2010	$59.780	12/01/2010	$61.030
WATER METER INSTALLER	03/01/2010	$67.500				

Additional Apprentice Information:
Minimum wage rates for apprentices employed on public works projects are listed above as a percentage of the pre-determined hourly wage rate established by the Commissioner under the provisions of the M.G.L. c. 149, ss. 26-27D. Apprentice ratios are established by the Division of Apprenticeship Training pursuant to M.G.L. c. 23, ss. 11E-11L.

All apprentices must be registered with the Division of Apprenticeship Training in accordance with M.G.L. c. 23, ss. 11E-11L.

All steps are six months (1000 hours) unless otherwise specified.

* Ratios are expressed in allowable number of apprentices to journeymen or fraction thereof.
** Multiple ratios are listed in the comment field.
*** The job site ratio of 2 apprentices (APP) for every 3 journeymen (JM) is allowed as follows:
1 JM: 1 APP; 2-3 JM: 2 APP; 4-6 JM: 4 APP; 7-9 JM: 6 APP; 10-12 JM: 8 APP; 13-15 JM: 10 APP; etc.
**** The job site ratio of 2 apprentices (APP) for every 3 journeymen (JM) is allowed as follows:
1-2 JM: 1 APP; 3-4 JM: 2 APP; 5 JM: 3 APP; 6-7 JM: 4 APP; 8 JM: 5 APP; etc.

This wage schedule must be posted at the work site in accordance with M.G.L. c. 149, § 27. Failure of the employer to pay "prevailing wage rates," which are the minimum wage rates listed above, on public works projects is a violation of M.G.L. c. 149, § 27. Employees not receiving such rates should report the violation to the Office of Fair Labor and Business Practices, 100 Cambridge Street, Boston, MA 02108; Tel: 617-727-3465. For any questions about the wage rates or classifications included on the wage schedule, please call DOS at 617-626-6952.

MASSACHUSETTS WEEKLY CERTIFIED PAYROLL REPORT FORM

Company's Name:	Address:	Phone No.:	Payroll No.:

Employer's Signature:	Title:	Contract No:	Tax Payer ID No.	Work Week Ending:

Awarding Authority's Name:	Public Works Project Name:	Public Works Project Location:	Min. Wage Rate Sheet No.

General / Prime Contractor's Name:	Subcontractor's Name:	"Employer" Hourly Fringe Benefit Contributions

Employee Name & Complete Address	Employee is OSHA 10 Certified (?)	Work Classification:	Appr. Rate (%)	Hours Worked Su.	Mo.	Tu.	We.	Th.	Fr.	Sa.	Project Hours (A) / All Other Hours	Hourly Base Wage (B)	Health & Welfare Insurance (C)	ERISA Pension Plan (D)	Supp. Unemp. (E)	Total Hourly Prev. Wage (F) (B+C+D+E)	Project Gross Wages (G) (A x F) / Total Gross Wages	Check No. (H)

NOTE: Pursuant to MGL Ch. 149 s.27B, every contractor and subcontractor is required to submit a "true and accurate" copy of their weekly payroll records directly to the awarding authority. Failure to comply may result in the commencement of a criminal action or the issuance of a civil citation.

Page _____ of _____

Date recieved by awarding authority
/ /

Notice to Awarding Authorities

The Massachusetts Prevailing Wage Law

M.G.L. c. 149, §§26-27

NOTICE TO AWARDING AUTHORITIES

- The enclosed wage schedule applies only to the specific project listed at the top of the schedule, and these rates will remain in effect for the duration of the project, except in the case of multi-year projects. For projects lasting longer than one year, awarding authorities must request updated rates.

- You should request an updated wage schedule from the Division of Occupational Safety if you have not opened bids or selected a contractor within 90 days of the date of issuance of the enclosed wage schedule.

- The wage schedule shall be incorporated in any advertisement or call for bids for the project for which it has been issued.

- Once a contractor has been selected by the awarding authority, the wage schedule shall be made a part of the contract for that project.

NOTICE TO CONTRACTORS

- The enclosed wage schedule must be posted in a conspicuous place at the work site during the life of the project.

- The wages listed on the enclosed wage schedule must be paid to employees on public works projects regardless of whether they are employed by the prime contractor, a filed sub-bidder, or any sub-contractor.

- The enclosed wage schedule applies to all phases of the project, including the final clean-up. Contractors whose only role is to perform final clean-up must pay their employees according to this wage schedule.

- All apprentices must be registered with the Massachusetts Division of Apprenticeship Training (DAT) in order to be paid at the lower apprentice rates. All apprentices must keep his/her apprentice identification card on his/her person during all work hours. If a worker is not registered with DAT, they must be paid the "total rate" listed on the wage schedule regardless of experience or skill level. For further information, please call 617-626-5409, or write to:

  DAT, 19 Staniford Street, 1st Floor, P.O. Box 146759, Boston, MA 02114.

© 2010 Commonwealth of Massachusetts.

WEEKLY PAYROLL RECORDS REPORT
& STATEMENT OF COMPLIANCE

In accordance with Massachusetts General Law c. 149, §27B, a true and accurate record must be kept of all persons employed on the public works project for which the enclosed rates have been provided. A Payroll Form has been printed on the reverse of this page and includes all the information required to be kept by law. Every contractor or subcontractor is required to keep these records and preserve them for a period of three years from the date of completion of the contract.

In addition, every contractor and subcontractor is required to submit a copy of their weekly payroll records to the awarding authority. For every week in which an apprentice is employed, a photocopy of the apprentice's identification card must be attached to the payroll report. Once collected, the awarding authority is also required to preserve those records for three years.

In addition, each such contractor, subcontractor, or public body shall furnish to the awarding authority directly, within fifteen days after completion of its portion of the work a statement, executed by the contractor, subcontractor or public body who supervises the payment of wages, in the following form:

STATEMENT OF COMPLIANCE

_____, 20_____

I,_____,_____
(Name of signatory party) (Title)

do hereby state:

That I pay or supervise the payment of the persons employed by

_____ on the _____
(Contractor, subcontractor or public body) (Building or project)

and that all mechanics and apprentices, teamsters, chauffeurs and laborers employed on said project have been paid in accordance with wages determined under the provisions of sections twenty-six and twenty-seven of chapter one hundred and forty nine of the General Laws.

Signature _____

Title _____

Notice to Drivers of BITUMINOUS CONCRETE

NOTICE: TO AWARDING AUTHORITIES AND CONTRACTORS

ISSUED: SEPTEMBER 1, 2006

DRIVERS WHO HAUL BITUMINOUS CONCRETE (ASPHALT)

The Massachusetts Supreme Judicial Court recently affirmed that drivers who haul bituminous concrete to public construction projects are not covered by the Prevailing Wage Law while off-site, including time spent over-the-road and picking-up materials. These drivers are covered by the Prevailing Wage Law only while on-site at the public construction project. In Teamsters Joint Council No. 10 v. Department of Labor, et al., 447 Mass. 100 (2006), the SJC upheld a 2001 administrative decision limiting the applicability of prevailing wage rates to the time bituminous drivers spend at the public construction site. This most recent decision of the SJC followed a 1989 ruling that had upheld an earlier Department of Labor (and Industries') policy that had deemed this category of drivers to be "teamsters" under the Law and, therefore, entitled to prevailing wage rates. See Construction Industries of Massachusetts v. Commissioner of Labor and Industries, 406 Mass. 162 (1989). However, the earlier court case had left open the question of whether this entitled these bituminous drivers to prevailing wage rates for their over-the-road time as well as their on-site time. This most recent decision has now answered that question.

All of the requirements of the Prevailing Wage Law, including certified weekly payroll requirements, apply to bituminous drivers for all time spent at the public construction site.

DRIVERS WHO HAUL READY-MIX CONCRETE (CEMENT)

Drivers who haul ready-mix concrete to public construction projects are not covered by the Prevailing Wage Law while off-site, including time spent over-the-road and picking-up materials. These drivers are covered by the Prevailing Wage Law while on-site at the public construction project. This applicability determination was established by a 2001 administrative decision of the Department of Labor's Division of Occupational Safety.

All of the requirements of the Prevailing Wage Law, including certified weekly payroll requirements, apply to ready-mix drivers for all time spent at the public construction site.

Please feel free to contact the Division of Occupational Safety at 617-626-6953 if you

have any questions. Questions about enforcement of the Prevailing Wage Law may be directed to the Attorney General's Fair Labor and Business Practices Division at 617-727-3465

© 2010 Commonwealth of Massachusetts.

GENERAL DECISION: MA20100006 04/23/2010 MA6

Date: April 23, 2010
General Decision Number: MA20100006 04/23/2010

Superseded General Decision Number: MA20080006

State: Massachusetts

Construction Type: Highway

Counties: Bristol, Essex, Middlesex, Norfolk, Plymouth and Suffolk Counties in Massachusetts.

HIGHWAY CONSTRUCTION PROJECTS

Modification Number	Publication Date
0	03/12/2010
1	03/19/2010
2	04/09/2010
3	04/16/2010
4	04/23/2010

* BRMA0001-016 03/01/2010

FOXBORO CHAPTER
BRISTOL (Attleboro, Berkley, Dighton, Mansfield, North Attleboro, Norton, Raynham, Rehoboth, Seekonk, Taunton); NORFOLK (Bellingham, Canton, Dedham, Foxboro, Franklin, Norfolk, Norwood, Planville, Sharon, Walpole, Westwood, Wrentham); and PLYMOUTH (Lakeville)

	Rates	Fringes
CEMENT MASON/CONCRETE FINISHER...	$ 43.86	24.15

---

* BRMA0001-017 03/01/2010

LOWELL CHAPTER
MIDDLESEX (Ashland, Framingham, Holliston, Hopkinton, Hudson, Maynard, Natick, Sherbvorn, Stow); and NORFOLK (Medfield, Medway, Millis)

	Rates	Fringes

CEMENT MASON/CONCRETE FINISHER...$ 43.86 24.15

BRMA0003-018 02/01/2010

NEWTON CHAPTER
MIDDLESEX (Newton) and NORFOLK (Dover, Needham, Wellesley)

	Rates	Fringes
CEMENT MASON/CONCRETE FINISHER...	$ 44.61	23.84

BRMA0003-019 02/01/2010

NEW BEDFORD CHAPTER

BRISTOL (Acushnet, Darmouth, Fairhaven, Fall River, Freetown, New Bedford, Somerset, Swansea, Westport); PLYMOUTH (Marion, Mattapoisett, Rochester, Wareham)

	Rates	Fringes
CEMENT MASON/CONCRETE FINISHER...	$ 44.61	23.84

BRMA0003-020 02/01/2010

QUINCY CHAPTER

NORFOLK (Avon, Braintree, Cohasset, Holbrook, Quincy, Randolph, Soughton, Weymouth); PLYMOUTH (Abington, Bridgewater, Brockton, Carver, Duxbury, East Bridgewater, Halifax, Hanover, Hanson, Hingham, Hull, Kinston, Marshfield, Middleboro, Norwell, Pembroke, Plymouth, Rockland, Scituate West Bridgewater, Whitman)

	Rates	Fringes
CEMENT MASON/CONCRETE FINISHER...	$ 44.61	23.84

CARP0026-002 09/01/2009

BRISTOL (Attleborough, North Attleborough); ESSEX; MIDDLESEX (Except Belmont, Cambridge, Everett, Malden, Medford, Somerville); NORFOLK (Bellingham, Canton, Foxboro, Franklin, Medfield, Medway, Millis, Needham, Norfolk, Norwood, Plainville, Quincy, Sharon, Walpole, Wellesley, Westwood, Wrentham); AND PLYMOUTH (Duxbury, Hanover, Hingham, Hull,

Marshfield, Norwell, Pembroke, Rockland and Scituate) COUNTIES

	Rates	Fringes
CARPENTER	$ 31.69	22.40

CARP0033-002 09/01/2009

MIDDLESEX (Belmont, Cambridge, Everett, Malden, Medford, Somerville); NORFOLK (Brookline, Dedham, Milton); and SUFFOLK

	Rates	Fringes
CARPENTER	$ 36.99	22.80

CARP0056-005 08/01/2009

All of SUFFOLK COUNTY; and those areas of BRISTOL, ESSEX, MIDDLESEX, NORFOLK, and PLYMOUTH COUNTIES situated INSIDE Boston Beltway (I-495) and North of Cape Cod Canal

	Rates	Fringes
PILEDRIVERMAN	$ 37.17	23.55

CARP0056-006 08/01/2009

Those areas of BRISTOL, PLYMOUTH, and NORFOLK COUNTIES situated OUTSIDE Boston Beltway (I-495) and South of Cape Cod Canal

	Rates	Fringes
PILEDRIVERMAN	$ 34.43	23.55

CARP0056-007 08/01/2009

Those areas of ESSEX and MIDDLESEX COUNTIES situated OUTSIDE Boston Beltway (I-495)

	Rates	Fringes
PILEDRIVERMAN	$ 34.43	23.55

CARP0424-003 03/01/2009

NORFOLK COUNTY (Braintree, Cohassett, Scituate, Weymouth,

Quincy)

	Rates	Fringes
CARPENTER.....	$ 31.58	21.34

CARP0624-003 03/01/2009

BRISTOL (except Attleboro & North Attleboro); DUKES; NANTUCKET; NORFOLK(Avon, Holbrook, Randolph, Stoughton); AND PLYMOUTH (REMAINDER OF COUNTY

	Rates	Fringes
CARPENTER.....	$ 31.58	21.34

ELEC0099-003 06/01/2009

BRISTOL (Attleboro, North Attleboro, Seekonk)

	Rates	Fringes
ELECTRICIAN.....	$ 34.08	53.34%

ELEC0103-006 03/01/2010

ESSEX (Amesbury, Andover, Boxford, Georgetown, Groveland, Haverhill, Lawrence, Merrimac, Methuen, Newbury, Newburyport, North Andover, Rowley, Salisbury, West Newbury); MIDDLESEX (Bedford, Billerica, Boxboro, Burlington, Carlisle, Chelmsford, Dracut, Dunstable littleton, Lowell, North Reading, Tewksbury, Tyngsboro, Westford, Wilmington)

	Rates	Fringes
ELECTRICIAN.....	$ 41.45	24.80

ELEC0103-007 03/01/2010

ESSEX (Beverly, Danvers, Essex, Gloucester, Hamilton, Ipswich, Manchester, Marblehead, Middleton, Peabody, Rockport, Salem, Topsfield, Wenham)

	Rates	Fringes
ELECTRICIAN.....	$ 41.45	24.80

ELEC0103-008 03/01/2010

ESSEX (Lynn, Lynnfield, Nahant, Saugus, Swampscott); MIDDLESEX (Acton, Arlington, Belmont, Cambridge, Concord, Everett, Framingham, Holliston, Lexington, Lincoln, Malden, Maynard, Medford, Melrose, Natick, Newton, Reading, Sherborn, Somerville, Stoneham, Sudbury, Wakefield, Waltham, Watertown, Wayland, Weston, Winchester, Woburn); NORFOLK (Bellingham, Braintree, Brookline, Canton, Cohasset, Dedham, Dover, Foxboro, Frankloin, Medfield, Medway, Millis, Milton, Needham, Norfolk, Norwood, Quincy, Sharon, Walpole, Wellesley, Westwood, Weymouth, Wrentham); PLYMOUTH (Hingham, Hull); SUFFOLK

	Rates	Fringes
ELECTRICIAN.....	$ 41.45	24.80

ELEC0104-002 08/31/2009

	Rates	Fringes
Line Construction:		
Cableman.....	$ 34.89	7.50+A
Equipment Operator.....	$ 34.89	11.50+A
Groundman.....	$ 22.58	7.50+A
Lineman.....	$ 41.05	14.43+A

FOOTNOTE:

a. PAID HOLIDAYS: New Year's Day; Memorial Day; Independence Day; Labor Day; Thanksgiving Day; Christmas Day and Columbus Day, provided the employee has been employed 5 working days prior to any one of the listed holidays.

ELEC0223-003 09/01/2009

BRISTOL (except Attleboro, North Attleboro, Seekonk); PLYMOUTH (except Hingham and Hull) NORFOLK (Avon, Randolph, Holbrook, Stoughton, and Plainview Twps)

	Rates	Fringes
ELECTRICIAN.....	$ 34.90	17.00

ENGI0004-004 12/01/2009

	Rates	Fringes
Power equipment operators:		
Backhoes; Cranes; Loaders; Front-end Loaders; Concrete Pavers; Post Hole Diggers	$ 38.48	20.84+A
Graders; Mechanics; Rollers	$ 38.14	20.84+A
Oilers (other than truck cranes and gradalls)	$ 21.70	20.84+A
Oilers (truck cranes & gradalls)	$ 24.67	20.84+A
Pumps	$ 27.84	20.84

HOURLY PREMIUM FOR BOOM LENGTHS (Including Jib):

Over 150 ft	+1.99
Over 185 ft	+3.48
Over 210 ft	+4.90
Over 250 ft	+7.42
Over 295 ft	+10.29
Over 350 ft	+11.96

FOOTNOTE:

A. PAID HOLIDAYS: New Year's Day, Washington's Birthday, Labor Day, Memorial Day, Independence Day, Patriot's Day, Veteran's Day, Thanksgiving Day, and Christmas Day.

IRON0007-004 03/16/2009

	Rates	Fringes
IRONWORKER		
BRISTOL (Easton); ESSEX (Beverly,Gloucester, Lynn, Lynnfield, Manchester,Marblehead, Nahant, Salem, Saugus, Swampscott); MIDDLESEX (Arlington, Bedford, Belmont, Burlington, Cambridge, Concord, Everett, Framingham, Lexington, Lincoln, Malden, Maynard, Medford, Melrose, Natick, Newton,		

Reading, Sherborn,
Somerville, Stoneham,
Sudbury, Wakefield,
Waltham, Watertown,
Wayland, Weston,
Winchester, Woburn);
NORFOLK (Except Medway);
PLYMOUTH (Abington,
Bridgewater, Brocton,
Duxbury, East Bridgewater,
Halifax, Hanover, Hanson,
Hingham, Hull, Kingston,
Marshfield, Norwell,
Pembroke, Plymouth,
Plympton, Rockland,
Scituate, West
Bridgewater, Whitman);
SUFFOLK.....$ 35.28 23.81
ESSEX (Amesbury, Andover,
Boxford, Danvers, Essex,
Georgetown, Hamilton,
Haverhill, Ipswich,
Lawrence, Merrimac,
Methuen, Newbury,
Newburyport, North
Andover, Rockport, Rowley,
Salisbury, Topsfield,
Wenham, West Newbury);
MIDDLESEX (Action,
bellerica, Carlisle,
Chelmsford, Dracut,
Dunstable, Groton,
Groveland, Littleton,
Lowell, Middleton, North
Reading, Pepperell,
Tewksbury, Tynsboro,
Westford, Wilmington).....$ 30.87 23.81

IRON0007-013 03/16/2010

MIDDLESEX (Ashby, Ashland, Ayer, Boxboro, Holliston, Hopkinton, Hudson, Marlboro, Shirley, Stow, Townsend); NORFOLK (Medway)

	Rates	Fringes
IRONWORKER.....	$ 35.29	24.60

IRON0037-003 06/01/2009

BRISTOL (Acushnet, Attleboro, Berkley, Dartmouth, Dighton, Fairhaven, Fall River, Freetown, Mansfield, New Bedford, North Attleboro, Norton, Raynham, Rehoboth, Seekonk, Somerset, Swansea, Taunton, Westport); NORFOLK (Billingham, Franklin, Plainville, Wrentham); PLYMOUTH (Lakeville, Marion, Mattapoisett, Middleboro, Rochester, Wareham)

	Rates	Fringes
IRONWORKER.....	$ 30.45	19.47

LABO0022-003 06/01/2009

SUFFOLK COUNTY (Boston, Chelsea, Revere, Withrop, Deer & Nut Island); MIDDLESEX COUNTY (Arlington, Belmont, Burlington, Cambridge, Everett, Malden, Medford, Melrose, Reading, Somerville, Stoneham, Wakefield, Winchester, Winthrop, and Woburn only); NORFOLK COUNTY (Brookline, Dedham, and Milton only)

	Rates	Fringes
Laborers:		
Airtrack operator, Curb Setter, Block pavers, rammer, hydraulic and similar self-powered drills.	$ 29.55	17.75
Asphalt Raker; Drill Operator; Fence and Guardrail Erector; Mason Tender; Pipelayer, laser beam operator.....	$ 29.05	17.75
Flagger.....	$ 23.15	17.75
Haz-mat Laborer.....	$ 30.80	17.75
Powdermen, Blaster.....	$ 29.70	17.75
Unskilled Laborer; Cement Finisher Tender.....	$ 28.80	17.75

LABO0022-004 06/01/2009

Counties of BRISTOL; ESSEX; PLYMOUTH; MIDDLESEX (with the exception of Arlington, Belmont, Burlington, Cambridge, Everett, Malden, Medford, Melrose, Reading, Somerville,

Stoneham, Wakefield, Winchester, Winthrop and Woburn); NORFOLK (with the exception of Brookline, Dedham, and Milton)

	Rates	Fringes
Laborers:		
Air-track operator, Curb Setter, Block Pavers, rammer, Hydraulic, and similar self-powered drills.	$ 27.60	16.35
Asphalt Raker; Drill Operator; Fence and Guardrail Erector; Mason Tender; Pipelayer, Laser beam operator	$ 27.10	16.35
Flagger	$ 20.95	16.35
Haz-mat Laborer	$ 28.85	16.35
Powdermen Blaster	$ 27.85	16.35
Unskilled Laborer; Cement Finisher Tender	$ 26.85	16.35

PAIN0035-002 01/01/2010

BRISTOL ,ESSEX AND PLYMOUTH COUNTIES; AND THE REMAINDER OF MIDDLESEX NORFOLK AND SUFFOLK COUNTIES

	Rates	Fringes
Painters:		
NEW CONSTRUCTION:		
Bridge	$ 43.01	21.40
Brush, Taper	$ 32.51	21.40
Spray, Sandblast	$ 33.91	21.40
REPAINT:		
Bridge	$ 43.01	21.40
Brush, Taper	$ 30.57	21.40
Spray, Sandblast	$ 31.97	21.40

PAIN0035-014 01/01/2010

MIDDLESEX (Cambridge, Everett, Malden, Medford, Somerville) SUFFOLK COUNTY (Boston, Chelsea) NORFOLK COUNTY (Brookline)

	Rates	Fringes
Painters:		

NEW CONSTRUCTION:

Bridge	$ 43.01	21.40
Brush, Taper	$ 38.30	21.40
Spray, Sandblast	$ 39.70	21.40

REPAINT:

Bridge	$ 43.01	21.40
Brush, Taper	$ 36.36	21.40
Spray, Sandblast	$ 37.76	21.40

PLAS0534-002 01/01/2009

ESSEX; MIDDLESEX; NORFOLK AND SUFFOLK COUNTY

	Rates	Fringes
CEMENT MASON/CONCRETE FINISHER	$ 35.00	25.76

SUMA1990-005 04/01/1990

	Rates	Fringes
BRICKLAYER	$ 20.61	4.87
Line Construction:		
Groundman	$ 12.09	3.90
PAINTER		
Spray (Linestriping)	$ 19.40	6.42
Power equipment operators:		
Cold Planer	$ 20.84	5.98
Gradall	$ 21.53	5.39
Spreader	$ 21.67	5.08
TRUCK DRIVER		
Truck Drivers 2 - axle	$ 16.74	4.12
Truck Drivers 5 - axle	$ 18.00	3.66

TEAM0379-002 06/01/2008

	Rates	Fringes
Truck drivers:		
Three-Axle	$ 29.87	11.51+A+B

FOOTNOTES FOR TRUCK DRIVERS:

A. PAID HOLIDAYS:
New Year's Day, Washington's Birthday, Memorial Day, Independence Day, Labor Day, Patriot's Day, Columbus Day, Veteran's Day, Thanksgiving Day and Christmas Day

B. PAID VACATION:
Employees with 4 months to 1 year of service receive 1/2 day's pay
per month; 1 week vacation for 1 - 5 years of service; 2 weeks vacation for
5 - 10 years of service; and 3 weeks vacation for more than 10 years of service

---

WELDERS - Receive rate prescribed for craft performing operation to which welding is incidental.

==========

Unlisted classifications needed for work not included within the scope of the classifications listed may be added after award only as provided in the labor standards contract clauses (29CFR 5.5 (a) (1) (ii)).

In the listing above, the "SU" designation means that rates listed under the identifier do not reflect collectively bargained wage and fringe benefit rates. Other designations indicate unions whose rates have been determined to be prevailing.

WAGE DETERMINATION APPEALS PROCESS

1.) Has there been an initial decision in the matter? This can be:

* an existing published wage determination
* a survey underlying a wage determination
* a Wage and Hour Division letter setting forth a position on a wage determination matter
* a conformance (additional classification and rate) ruling

On survey related matters, initial contact, including requests

for summaries of surveys, should be with the Wage and Hour Regional Office for the area in which the survey was conducted because those Regional Offices have responsibility for the Davis-Bacon survey program. If the response from this initial contact is not satisfactory, then the process described in 2.) and 3.) should be followed.

With regard to any other matter not yet ripe for the formal process described here, initial contact should be with the Branch of Construction Wage Determinations. Write to:

Branch of Construction Wage Determinations
Wage and Hour Division
U.S. Department of Labor
200 Constitution Avenue, N.W.
Washington, DC 20210

2.) If the answer to the question in 1.) is yes, then an interested party (those affected by the action) can request review and reconsideration from the Wage and Hour Administrator (See 29 CFR Part 1.8 and 29 CFR Part 7). Write to:

Wage and Hour Administrator
U.S. Department of Labor
200 Constitution Avenue, N.W.
Washington, DC 20210

The request should be accompanied by a full statement of the interested party's position and by any information (wage payment data, project description, area practice material, etc.) that the requestor considers relevant to the issue.

3.) If the decision of the Administrator is not favorable, an interested party may appeal directly to the Administrative Review Board (formerly the Wage Appeals Board). Write to:

Administrative Review Board
U.S. Department of Labor
200 Constitution Avenue, N.W.
Washington, DC 20210

4.) All decisions by the Administrative Review Board are final.

==========

END OF GENERAL DECISION

GENERAL TERMS AND CONDITIONS OF THE CONTRACT FOR CONSTRUCTION, RECONSTRUCTION, ALTERATION, REMODELING, OR REPAIR OF ANY CITY OF CAMBRIDGE PUBLIC WORK

TABLE OF CONTENTS

Page

ARTICLE 1 DEFINITIONS ____ 5
ARTICLE 2 ABOUT THE CONTRACT DOCUMENTS ____ 7
ARTICLE 3 THE CITY ____ 11
ARTICLE 4 THE ENGINEER ____ 13
ARTICLE 5 THE CONTRACTOR ____ 15
ARTICLE 6 SUBCONTRACTORS ____ 31
ARTICLE 7 PERFORMANCE AND PAYMENT BONDS ____ 32
ARTICLE 8 INSURANCE REQUIREMENTS ____ 31
ARTICLE 9 TESTS AND INSPECTIONS ____ 36
ARTICLE 10 UNCOVERING AND CORRECTING WORK ____ 37
ARTICLE 11 CHANGES IN THE WORK ____ 38
ARTICLE 12 CHANGE IN THE CONTRACT TIME ____ 41
ARTICLE 13 PAYMENTS ____ 44
ARTICLE 14 SUBSTANTIAL COMPLETION ____ 50
ARTICLE 15 GUARANTEES AND WARRANTIES ____ 51
ARTICLE 16 CLAIMS ____ 52
ARTICLE 17 EMERGENCIES ____ 56
ARTICLE 18 TERMINATION OR SUSPENSION OF THE CONTRACT ____ 56
ARTICLE 19 AMERICANS WITH DISABILITIES ACT (42 U.S. 12131) ____ 57
ARTICLE 20 WRITTEN NOTICE TO THE PARTIES ____ 58
ARTICLE 21 MISCELLANEOUS PROVISIONS ____ 58

GENERAL TERMS AND CONDITIONS OF THE CONTRACT FOR CONSTRUCTION, RECONSTRUCTION, INSTALLATION, DEMOLITION, MAINTENANCE, OR REPAIR OF ANY CITY OF CAMBRIDGE PUBLIC WORK

ARTICLE 1 DEFINITIONS

1.1. In General.

1.1.1. Well-known meanings. When words or phrases which have a well-known technical or construction industry or trade meaning are used in the Contract Documents, such words or phrases shall be interpreted in accordance with that meaning, unless otherwise stated.

1.1.2. Capitalization. The words and terms defined in this Article are capitalized in these General Terms and Conditions of the Contract. Other capitalized words may refer to a specific document found in the Contract Documents.

1.1.3. Persons. Whenever the word person or persons is used, it includes, unless otherwise stated, entity or entities, respectively, including, but not limited to, corporations, partnerships, and joint venturers.

1.1.4. Singular and Plural. The following terms have the meanings indicated which are applicable to both the singular and the plural thereof.

1.2. Definitions.

1.2.1. Agreement-The Agreement is the written document between the **City** and the **Contractor** which is titled: Agreement between the City of Cambridge and the Contractor, which is the executed portion of the Contract, and which forms a part of the Contract. The Agreement also includes all documents required to be attached thereto, including, but not limited to, the performance bond, the labor and materials or payment bonds, certificates of insurance, and all Modifications of the Agreement.

1.2.2. Change Order-A Change Order is a document which is signed by the **Contractor**, the **Engineer**, and the **City;** which is directed to the **Contractor;** which authorizes the **Contractor** to make an addition to, a deletion from or a revision in the Work, or an adjustment in the Contract Sum or in the Contract Time; and which is issued on or after the date of the Agreement between the **Contractor** and the **City.**

1.2.3. City- The **City** refers to the City of Cambridge, which is the owner of the Project and is the public awarding authority with whom the **Contractor** has entered into the Contract and for whom the Work is to be provided.

1.2.4. Claim-A Claim is a dispute, demand, or assertion by one of the parties arising out of or relating to the Contract for which such party is seeking relief.

1.2.5. Contract-The Contract consists of all the Contract Documents. The Contract represents the entire and integrated agreement between the parties hereto and supersedes prior negotiations, representations, or agreements, either written or oral. The Contract may be amended or modified only by a Modification to the Contract signed by both parties.

1.2.6. Contract Documents-The Contract Documents consist of the Agreement; the notice of award of the Contract; the Notice to Proceed; the entire Project Manual; Change Orders; Work Change Directives; the **Contractor's** Bid and all accompanying documents accepted by the City; and the

Engineer's written interpretations and clarifications issued on or after the issuance of the Notice to Proceed. Shop Drawing submittals and reports or drawings utilized by the **Engineer** in preparing the Contract Documents are not Contract Documents.

1.2.7. Contractor-The **Contractor** is the person who is awarded the Contract for the Project herein pursuant to M.G.L. c. 39, §39M; and is identified in the Agreement as such. The term "**Contractor**" is intended to include the **Contractor** as well as its authorized representative(s).

1.2.8. Contract Sum-The Contract Sum is the total amount stated in the Agreement payable by the **City** to the **Contractor** for the completion of the Work in accordance with the Contract Documents.

1.2.9. Contract Time-Unless otherwise provided, the Contract Time is the number of days allotted in the Contract Documents or the dates stated in the Agreement, including authorized adjustments, for Substantial Completion.

1.2.10. Coordination Drawings-Coordination Drawings are those drawings which are prepared by the **Contractor** or a Subcontractor which show the exact alignment, physical locations, and configuration of the mechanical, electrical, and fire protection installations.

1.2.11. Day-The term "day" shall mean calendar day unless otherwise stated.

1.2.12. Engineer-The **Engineer** is the person lawfully licensed to practice engineering and has been selected by the **City** to administer the Contract. The term "**Engineer**," while referred to in the singular, means the **Engineer** and/or the **Engineer's** representative.

1.2.13. Field Order-A Field Order is a written order issued by the **Engineer** which orders minor changes in the Work, but which does not involve a change in the Contract Sum or the Contract Time.

1.2.14. Final Completion-Final Completion is the point in time when the Engineer certifies that the Work has been fully completed in accordance with the Contract Documents. Final Completion shall be no later than thirty (30) days after Substantial Completion.

1.2.15. General Requirements-General Requirements refer to Sections of Division 1 of the Specifications.

1.2.16. Modification-A Modification is a written instrument which amends the Contract after execution of the Agreement.

1.2.17. Notice to Proceed-A Notice to Proceed is a written notice given by the **City,** or the **Engineer**, to the **Contractor** fixing the date on which the Contract Time will begin to run and on which the **Contractor** shall start to perform its obligations under the Contract Documents.

1.2.18. Drawings-The Drawings are the graphic and pictorial portions of the Contract Documents, wherever located and whenever issued, showing the design, location, dimensions, scope, extent, and character of the Work to be furnished and performed by the **Contractor** and which have been prepared or approved by the **Engineer**.

1.2.19. Product Data-Product Data are illustrations, standard schedules, performance charts, instructions, brochures, diagrams, and other information furnished by the General **Contractor** to illustrate materials or equipment for some portion of the Work. Product Data are not considered part of the Contract Documents.

1.2.20. Project-The Project is the total Work to be provided under the Contract Documents and may be the whole or a part as indicated elsewhere in the Contract Documents and may include construction by the **City** or by separate contractors. The Project is the Work described in the invitation to bid (advertisement) and Specifications and illustrated by the Drawings, including any Modifications.

1.2.21. Project Manual-The Project Manual is the entire set of bidding documents which includes, but is not limited to, the invitation to bid (advertisement), the instructions to bidders, all of the forms, the wage rates, all City and state requirements, the General Terms and Conditions of the Contract, any supplementary conditions thereto, the Drawings, the Specifications, and all addenda.

1.2.22. Proposed Change Order-A Proposed Change Order is a Change Order that has been submitted by the **Contractor** to the **Engineer,** is under review, and has not been approved by the **City**.

1.2.23. Samples-Samples are physical examples of materials, equipment, or workmanship that are representative of some portion of the Work and which establish the standards by which such portion of the Work will be judged. Samples are not considered part of the Contract Documents.

1.2.24. Shop Drawings-Shop Drawings are all drawings, diagrams, illustrations, schedules, and other information which are specifically prepared or assembled by or for the **Contractor** and submitted by the **Contractor** to illustrate some portion of the Work. Shop Drawings are not considered part of the Contract Documents.

1.2.25. Site-The Site is the location of the Project and of the Work.

1.2.26. Specifications-Specifications are those portions of the Contract Documents consisting of written technical descriptions of materials, equipment, construction systems, standards, and workmanship as applied to the Work and certain administrative details applicable thereto.

1.2.27. Subcontractor-A Subcontractor is a person, firm or corporation who contracts directly with the **Contractor**, unless otherwise stated.

1.2.28. Submittals-Submittals are those Shop Drawings, Product Data, Samples, or any other required document which are provided to the Engineer for review and approval.

1.2.29. Substantial Completion-Substantial Completion means that the Work has been completed and the Site or the facility is opened to public use, except for minor incomplete or unsatisfactory items that do not materially impair the usefulness of the Work. The **Engineer** shall decide what constitutes "minor," "incomplete," "unsatisfactory," and "materially" and the **Engineer's** decision shall be final.

1.2.30. Sub-subcontractor-A Sub-subcontractor is a person who has contracted directly with a Subcontractor.

1.2.31. Supplier-A Supplier is a manufacturer, fabricator, distributor, materialperson, or vendor having a direct contract with the Contractor or with any Subcontractor to furnish materials or equipment to be incorporated into the Work by the Contractor or any Subcontractor.

1.2.32. Work-Work refers to the services and the entire completed construction or the various separately identifiable parts thereof required by the Contract Documents, including all labor, materials, and equipment furnished, furnished and incorporated into the Project, or to be provided by the **Contractor** to fulfill the **Contractor's** obligations. The Work may constitute the whole or a part of the Project.

1.2.33. Work Change Directive-A Work Change Directive is a written directive to the **Contractor** ordering an addition to, a deletion from, or a revision to the Work issued on or after the date of the Agreement, signed by the **City**, and recommended by the **Engineer**.

ARTICLE 2 ABOUT THE CONTRACT DOCUMENTS

2.1. Priority/Conflict.

2.1.1. Priority Among Contract Documents. In the event of conflict among the Contract Documents, the Contract Documents shall be construed according to the following priorities:

Highest Priority: Modifications
Second Priority: Agreement
Third Priority: Addenda-later date to take precedence
Fourth Priority: Supplementary General Conditions
Fifth Priority: General Conditions
Sixth Priority: Drawings and Specifications

2.1.1.1. If there is a conflict between the Drawings and Specifications, the figured dimensions shall govern over the scaled dimensions. Detailed Drawings shall govern over the general Drawings. Larger scale Drawings shall take precedence over smaller scale Drawings. Drawings shall govern over Shop Drawings. Whenever there is a conflict concerning quality or quantity between or among notes, specifications, dimensions, details, or schedules in the Specifications or in the Drawings, or between the Specifications and the Drawings, or in all other instances not specifically noted above, the **Contractor** shall provide, unless otherwise directed by a Modification of the Contract, the better quality or greater quantity of Work at no increase in the Contract Sum or in the Contract Time.

2.1.1.2. Compliance with these priority conditions shall not justify any changes in the Work or any increase in the Contract Sum or Contract Time, unless any such compliance results in Work that may not be reasonably inferred from the Contract Documents as being required to produce the intended result as determined by the **Engineer**.

2.1.2. Review of the Contract Documents and Field Conditions and Discovery of Conflict, Error, Ambiguity, or Discrepancy. Before starting the Work, and during the progress thereof, the **Contractor** shall carefully study and compare the Contract Documents with each other and with the information furnished by the **City** pursuant to Article 3 and shall at once report to the **Engineer** any error, inconsistency, or omission the **Contractor** may discover. Any necessary change shall be ordered as provided in Article 11, subject to the requirements of any other provisions of the Contract Documents. The **Contractor** shall not proceed with the Work affected thereby (except in an emergency) until a Modification has been issued. If the **Contractor** proceeds with the Work having discovered such errors, inconsistencies, or omissions contrary to the provisions contained herein, or if by reasonable study of the Contract Documents the **Contractor** could have discovered such, the **Contractor** shall bear all costs arising therefrom. The **Contractor** shall be liable to the **City** for failure to report any conflict, error, ambiguity, or discrepancy of which it knew or should have known.

2.1.3. Field Measurements. The **Contractor** shall take field measurements and verify field conditions and shall carefully compare such field measurements and conditions and other information known to the **Contractor** with the Contract Documents before commencing activities. Errors, inconsistencies, or omissions discovered shall be reported to the **Engineer** at once.

2.1.4. Statutory Provisions. The **City** and the **Contractor** recognize that other rights duties and obligations with respect to public construction contracts are provided for by statute, notwithstanding the fact that they may not be provided for in the Contract Documents. In case of conflict between the statutory provisions and other provisions of the Contract Documents and the provisions of any applicable statute, the statutory provisions shall govern.

2.1.5. Voided or Unlawful Provisions. In the event any provision in the Contract is voided or deemed unlawful, such provision shall be deleted without affecting the remainder of the Contract.

2.2. Execution.

2.2.1. Execution of the Agreement by the **Contractor** is a representation that the **Contractor**

has visited the Site, become familiar with local conditions under which the Work is to be performed, and correlated personal observations with requirements of the Contract Documents.

2.3. Intent.

2.3.1. Entire Agreement. The Contract Documents comprise the entire agreement between the **City** and the **Contractor** concerning the Work. The intent of the Contract Documents is to include all items necessary for the proper execution and completion of the Work by the **Contractor**. The Contract Documents are complementary; what is required by one shall be as binding as if required by all. Performance by the **Contractor** shall be required only to the extent consistent with the Contract Documents and reasonably inferable from them as being necessary to produce the intended results. All Work mentioned or indicated in the Contract Documents shall be performed by the **Contractor** as part of this Contract unless it is specifically indicated in the Contract Documents that such Work is to be done by others.

2.3.2. Statutory Provisions. Each and every provision of law, code, and regulation, required by law to be inserted in these Contract Documents shall be deemed to be inserted herein, and they shall be read and enforced as though it were included herein, and if through mistake or otherwise, any such provision is not inserted, or if not correctly inserted, then upon the application of either party, the Contract Documents shall forthwith be physically amended to make such insertion.

2.3.3. Functionally Complete Project. It is the intent of the Contract Documents to describe a functionally complete Project. The intent of the Contract Documents is to include all items necessary for the proper execution and completion of the Work by the **Contractor**. Any Work, materials, or equipment that may be reasonably inferred from the Contract Documents or from prevailing custom or trade usage as being required to produce the intended result will be furnished and performed by the **Contractor** whether or not specifically called for in the Contract Documents.

2.3.4. Indications or Notations. All indications or notations which apply to one of a number of similar situations, materials, or processes shall be deemed to apply to all such situations, materials, or processes wherever they appear in the Work, except where a contrary result is clearly indicated by the Contract Documents.

2.3.5. Standards or Quality of Materials or Workmanship. Where no explicit quality or standards for materials or workmanship are established for Work, such Work is to be of good quality for the intended use and consistent with the quality of the surrounding Work and of the construction of the Project generally.

2.3.6. Manufactured Products. All manufactured articles, materials, and equipment shall be applied, installed, connected, erected, used, cleaned, and conditioned in accordance with the manufacturer's written or printed directions and instructions unless otherwise indicated in the Contract Documents.

2.3.7. Mechanical, Electrical, and Fire Protection Plans. The mechanical, electrical, and fire protection Plans are diagrammatic only and are not intended to show the alignment, physical locations, or configurations of such Work. Such Work shall be installed without additional cost to the **City** to clear all obstructions, permit proper clearances for the Work of other trades, and present an orderly appearance where exposed. Prior to beginning such Work, the **Contractor** shall prepare Coordination Drawings and demonstrate to the **Engineer's** satisfaction that the installations will comply with the preceding sentence. The **Contractor** shall be solely liable and responsible for any costs and/or delays resulting from the **Contractor's** failure to prepare such Coordination Drawings.

2.3.8. Locations of Fixtures and Outlets. Exact locations of fixtures and outlets shall be obtained from the **Engineer** as provided in Article 5 before the Work is roughed in. Work installed without such information from the **Engineer** shall be relocated at the **Contractor's** expense.

2.3.9. Tests. When test boring or soil test information are included with the Contract Documents or otherwise made available to the **Contractor** and such test boring or soil test information was obtained by the **City** for use by the **Engineer** in the design of the Project or Work, the **City** does not hold out such information to the **Contractor** as an accurate or approximate indication of subsurface conditions, and no claim for extra cost of extension of time resulting from a reliance by the **Contractor** on such information shall be allowed except as otherwise provided herein. Any such reports are not part of the Contract Documents.

2.3.10. Joining Work. Where the Work is to fit with existing conditions or work to be performed by others, the **Contractor** shall fully and completely join the Work with such conditions or work, unless otherwise specified.

2.4. Organization.

2.4.1. Except as provided in M.G.L. c. 149, §44F, the organization of the Specifications into divisions, sections, and articles, and the arrangement of Drawings shall not control the **Contractor** in dividing the Work among Subcontractors or in establishing the extent of Work to be performed by any trade.

2.5. References.

2.5.1. Where codes, manuals, specifications, standards, requirements and publications of public and private bodies are referred to in the Contract Documents whether specifically or by implication, references shall be understood to be to the latest revision prior to the date of receiving bids, except where otherwise indicated. Where statutes are referred to in the Contract Documents whether specifically or by implication, references shall be understood to be to the latest revision.

2.5.2. References herein to particular paragraphs or Articles are solely to facilitate finding additional information with regard to the specific matters and are not to be construed in any way as limiting the possible paragraphs and Articles in which such matters may be found elsewhere in this document.

2.6. Reuse of Engineer's Written Instruments.

2.6.1. Neither the **Contractor** nor any Subcontractor or Supplier shall have or acquire any title to or ownership rights in any of the Drawings, Specifications, or other documents prepared by the **Engineer** and shall not reuse any of such Drawings, Specifications, or other documents without prior written consent of the **City** and the **Engineer**.

2.7. Written Material of the Contractor.

2.7.1. All written material prepared or collected by the **Contractor** in the course of completing the Work shall be the exclusive property of the **City** and shall not be used by the **Contractor** for any purpose other than the purpose of this Contract.

2.8. Modifying Words.

2.8.1. In the interest of simplicity, modifying words such as "all" and "any" may be omitted, but the fact that such words may be absent from one sentence and appear in another is not intended to affect the interpretation of either statement.

2.9. Use of Certain Words and Terms.

2.9.1. Whenever in the Contract Documents the terms "as ordered," "as directed," "as required," "as allowed," "as approved," or terms of like effect or import are used, or the adjectives "reasonable," "suitable," "acceptable," "proper," "satisfactory," or adjectives of like effect or import are used to describe a

requirement, direction, review, or judgment of the **City** or of the **Engineer** as to the Work, it is intended that such requirement, direction, review, or judgment will be solely to evaluate, in general, the completed Work for compliance with the requirements of and information in the Contract Documents and conformance with the design concept of the completed Project as a functioning whole as shown or indicated in the Contract Documents (unless there is a specific statement indicating otherwise).

2.9.2. The use of any such term or adjective shall not be effective to change the duties and responsibilities of the **City** or the **Engineer** from those assigned in the Contract Documents or to assign any duty or authority to supervise or direct the furnishing or performance of the Work or any duty or authority to undertake responsibility contrary to the provisions of the Contract Documents.

2.9.3. When the words "Contractor," "Subcontractor," Sub-subcontractor," and "Supplier" are used, they are intended to include their employees and agents, unless otherwise specified.

2.10. Modification of the Contract Documents.

2.10.1. Major Modifications. Major Modifications may affect the Contract Sum or the Contract Time. The Contract Documents may be amended to provide for additions, deletions, and revisions in the Work or to modify the terms and conditions thereof in one or more of the following ways, all of which must contain a written endorsement by the **City**:

2.10.1.1. a formal written amendment;

2.10.1.2. a Change Order;

2.10.1.3. a Work Change Directive; or

2.10.1.4. the **Engineer's** written interpretation, clarification, or decision.

2.10.2. Minor Modifications. Minor modifications do not affect the Contract Sum or the Contract Time. The requirements of the Contract Documents may be supplemented and minor variations and deviations of the Work may be authorized in one or more of the following ways:

2.10.2.1. a Field Order; or

2.10.2.2. the **Engineer's** approval of a Shop Drawing or Sample.

ARTICLE 3 THE CITY

3.1. Signatory.

3.1.1. All documents which require a signature or an endorsement by the **City** must be signed by the City Manager in order to be deemed ratified by the **City**.

3.2. Requirements to Provide Documents.

3.2.1. To the extent they are available, the **City** shall furnish surveys describing physical characteristics, legal limitations, and utility locations for the site of the Project, and a legal description of the Site.

3.2.2. The **City** shall obtain and pay for necessary approvals, easements, assessments, and charges which are customarily secured prior to the execution of the Contract.

3.2.3. The **City** shall furnish information or services required of the **City** hereunder with reasonable promptness after receipt from the **Contractor** of a written request for such information or

services.

3.2.4. The **City** shall provide the **Contractor**, at no charge, such copies of the Project Manual as are reasonably necessary for the execution of the Work.

3.3. Clerk of the Works.

3.3.1. The **City** may engage a Clerk of the Works for this Project, in which case the **City** shall, upon request of the **Contractor**, provide the **Contractor** with a written statement of the duties, responsibilities, and limitations of authority of such Clerk of the Works. Except as expressly set forth in such written statement, the Clerk of the Works shall have no authority to approve Work, to approve Change Orders, or to exercise any of the power and authority of the **City** or the **Engineer**. The Clerk of the Works shall observe the **Contractor's** operations and construction activities for compliance with the Drawings and Specifications. The Clerk of the Works shall have access to all areas of the Project at all times. The **Contractor** shall fully cooperate with the Clerk of the Works in the performance of the Clerk's duties.

3.4. City's Right to Perform Construction and to Award Separate Contracts.

3.4.1. The **City** reserves the right to perform construction or operations at the Site with its own forces or others. If the **Contractor** claims that a delay or additional cost is involved because of such action by the **City**, the **Contractor** shall make such Claim as provided elsewhere in the Contract Documents.

3.4.2. When the separate contracts are awarded for different portions of the Project or other construction or operations on the site, the term "**Contractor**" in the Contract Documents in each case shall mean the **Contractor** who executes each separate City-Contractor Agreement.

3.4.3. The **City** shall provide for coordination of the activities of the **City's** own forces and of each separate contractor with the Work of the **Contractor**, who shall cooperate with them. The **Contractor** shall afford each other person access to the Site and shall properly coordinate its Work with that of the persons performing other work. The **Contractor** shall participate with other separate contractors and the **City** in reviewing their construction schedules when directed to do so. The **Contractor** shall make any revisions to the construction schedules deemed necessary after a joint review and mutual agreement. The construction schedules shall then constitute the schedules to be used by the **Contractor**, separate contractors, and the **City** until subsequently revised.

3.5. Limitations on the City's Responsibilities.

3.5.1. The **City** shall not supervise, direct, or have control or authority over, nor be responsible for the **Contractor's** means, methods, techniques, sequences, or procedures of construction or the safety precautions and programs incident thereto, or for any failure of the **Contractor** to comply with laws, codes and regulations applicable to the furnishing or performance of the Work. The **City** will not be responsible for the **Contractor's** failure to perform or furnish the Work in accordance with the Contract Documents. The **City** is not responsible for the acts or omissions of the **Contractor**, any Subcontractor, Supplier, or anyone for whose acts the **Contractor**, any Subcontractor or Suppliers may be liable.

3.5.2. The **City's** authority to review any of the **Contractor's** progress schedules, or its decision to raise or not to raise any objections about such schedules shall not impose on the **City** any responsibility for the timing, planning, scheduling, or execution of the Work, nor in any way give rise to any duty or responsibility on the part of the **City** to exercise this authority for the benefit of the **Contractor**, any Subcontractor or Supplier or any other party.

3.5.3. The **City's** decision to raise or not to raise objections with regard to any aspects of the **Contractor's** insurance shall in no way give rise to any duty or responsibility on the part of the **City** to or for the benefit of the **Contractor**, any Subcontractor, any Supplier, or any other party.

3.6. Reservation of Rights.

3.6.1. The **City** reserves the right to correct at any time any error in any progress payment that may have been made.

3.6.2. Should defective Work be discovered subsequent to final payment, the **City** reserves the right to make a claim and recover all costs and professional fees associated therewith, including the cost of removing and/or replacing the defective Work.

3.7. Waivers.

3.7.1. All waivers by the **City** are valid only to the extent that they are signed by the **City**. Any such waivers pertain only to the specific matter contained in the waiver and not to any similar, subsequent matters.

ARTICLE 4 THE ENGINEER

4.1. City's Representative.

4.1.1. The **Engineer** is the **City's** representative (1) during construction, (2) until final payment is due, and (3) with the **City's** concurrence, from time to time during the correction period described in Article 10. The **Engineer** will advise and consult with the **City**. The **Engineer** will have authority to act on behalf of the **City** only to the extent provided in the Contract Documents, unless otherwise modified by a written instrument in accordance with other provisions of the Contract.

4.1.2. The duties, responsibilities, and the limitations of authority of the **Engineer** as the **City's** representative during construction are set forth in the Contract Documents and shall not be extended without the written consent of the **City** and the **Engineer**.

4.2. Administration of the Contract.

4.2.1. The **Engineer** will provide administration of the Contract as described in the Contract Documents, unless the **City** has engaged a construction manager.

4.3. Visits to the Site.

4.3.1. The **Engineer** will visit the site at intervals appropriate to the stage of construction to become generally familiar with the progress and quality of the completed Work and to determine in general if the Work is being performed in a manner indicating that the Work, when completed, will be in accordance with the Contract Documents. However, the **Engineer** will not be required to make exhaustive or continuous on-site inspections to check the quality or quantity of the Work. On the basis of on-site observations as an engineer, the **Engineer** will keep the **City** informed of progress of the Work in writing and will endeavor to guard the **City** against defects and deficiencies in the Work.

4.4. Communications Facilitating Contract Administration.

4.4.1. Except as otherwise provided in the Contract Documents or when direct communications have been specially authorized, the **City** and the **Contractor** shall endeavor to communicate through the **Engineer**. Communications by and with the **Engineer's** consultants shall be through the **Engineer**. Communications by and with Subcontractors and Suppliers shall be through the **Contractor**. Communications by and with **City** employees and separate contractors shall be through the **City**.

4.4.2. When it deems it necessary or expedient, the **City** may communicate directly with the **Contractor**, any Subcontractors, Suppliers, or consultants.

4.5. Certification of Applications for Payment.

4.5.1. Based on the **Engineer's** observations and evaluations of the **Contractor's** applications for payment, the **Engineer** will review and certify the amounts due the **Contractor** and will issue certificates for payment in such amounts.

4.6. Rejection of Work.

4.6.1. The **Engineer** will have authority to reject or disapprove Work which (1) does not conform to the Contract Documents; (2) which the **Engineer** b elieves to be defective; and (3) the **Engineer** believes will not produce a completed Project that conforms to the Contract Documents or that will prejudice the integrity of the design concept of the completed Project as a functioning whole as indicated by the Contract Documents. Whenever the **Engineer** considers it necessary or advisable for implementation of the intent of the Contract Documents, the **Engineer** will have authority to require additional inspection or testing of the Work in accordance with Article 9, whether or not such Work is fabricated, installed, or completed. However, neither this authority of the **Engineer** nor a decision made in good faith either to exercise or not to exercise such authority shall give rise to a duty or responsibility of the **Engineer** to the **Contractor**, Subcontractors, Suppliers, or other persons performing portions of the Work.

4.7. Review of Submittals.

4.7.1. The **Engineer** will review or take other appropriate action upon the **Contractor's** submittals such as Shop Drawings, Product Data, and Samples, but only for the limited purpose of checking for conformance with information given and the design concept expressed in the Contract Documents and only to the extent which the **Engineer** believes desirable to protect the **City's** interest. The **Engineer's** action will be taken with reasonable promptness, while allowing sufficient time in the **Engineer's** professional judgment to permit adequate review, taking into account the time periods set forth in the latest schedule prepared by the **Contractor** and approved by the **Engineer**. Review of such submittals is not conducted for the purpose of determining the accuracy and completeness of other details such as dimensions and quantities, or for substantiating instructions for installation or performance of equipment or systems, all of which remain the responsibility of the **Contractor** as required by the Contract Documents. The **Engineer's** review of the **Contractor's** submittals shall not relieve the **Contractor** of the obligations under Article 5. The **Engineer's** review shall not constitute approval of safety precautions or of any construction means, methods, techniques, sequences, or procedures. The **Engineer's** approval of a specific item shall not indicate approval of an assembly of which the item is a component. After the rejection of the second resubmittal of any one Submittal, the **Contractor** shall bear the cost of the review of each subsequent resubmittal.

4.8. Preparation of Change Orders and Work Change Directives.

4.8.1. The **Engineer** will prepare Change Orders and Work Change Directives and may authorize minor Modifications in the Work as provided in Article 11.

4.9. Inspections.

4.9.1. The **Engineer** will conduct inspections to determine the date or dates of Substantial Completion and the date of final completion; will receive and forward to the **City** for the **City's** review and records written warranties and related documents required by the Contract and assembled by the **Contractor**; and will issue a final certificate for payment upon the **Contractor's** compliance with all of the requirements of the Contract Documents.

4.10. Interpretations, Clarifications, and Decisions.

4.10.1. The **Engineer** will interpret and decide matters concerning performance under and

requirements of the Contract Documents on written request of either the **City** or the **Contractor**. The **Engineer's** response to such requests will be made with reasonable promptness and within the time set forth in the Agreement between the **City** and the **Engineer**. Any such written interpretations, clarifications, and decisions shall be binding on the **Contractor**.

4.10.2. Interpretations, clarifications, and decisions of the **Engineer** will be consistent with the intent of and reasonably inferable from the Contract Documents and will be in writing or in the form of drawings. The **Engineer** will not be liable to the **Contractor**, any Subcontractor, or Supplier for results of interpretations, clarifications, or decisions so rendered in good faith.

4.10.3. The **Engineer** may, as the **Engineer** judges desirable, issue additional drawings or instructions indicating in greater detail the construction or design of the various parts of the Work; such drawings or instructions may be effected by a Field Order or other notice to the **Contractor**, and provided such drawings or instructions are reasonably consistent with the previously existing Contract Documents, the Work shall be executed in accordance with such additional drawings or instructions without any additional cost or an extension of the Contract Time.

4.10.4. The **Engineer's** decisions on matters relating to aesthetic effect must be consistent with the **City's** and will be final.

4.11. Limitation on the Engineer's Responsibilities.

4.11.1. Neither the **Engineer's** authority to act under the provisions of the Contract Documents nor any decision made by the **Engineer** in good faith to exercise or not to exercise such authority shall give rise to any duty or responsibility of the **Engineer** to the **Contractor**, any Subcontractor, any Supplier, any surety for any of them or any other person.

4.11.2. The **Engineer** will not have control over or charge of and will not be responsible for construction means, methods, techniques, sequences, or procedures, or for safety precautions and programs in connection with the Work, since these are solely the **Contractor's** responsibility as provided in Article 5. The **Engineer** will not be responsible for the **Contractor's** failure to carry out the Work in accordance with the Contract Documents. The **Engineer** will not have control over or charge of and will not be responsible for acts or omissions of the **Contractor**, Subcontractors, Suppliers, or of any other persons performing portions of the Work.

ARTICLE 5 THE CONTRACTOR

5.1. Relationship with the City.

5.1.1. The **Contractor** is an independent contractor and not an employee of the **City.** The **Contractor** is engaged by virtue of the Contract to perform only those services contained therein. The **Contractor** is not authorized to contract on behalf of the **City** or to incur any liability on the part of the **City**.

5.1.2. The **City** (1) shall not enter into a contract with, and shall not approve as a subcontractor furnishing labor and materials for a part of any such work, a foreign corporation which has not filed with such awarding authority a certificate of the state secretary stating that such corporation has complied with sections three and five of chapter one hundred and eighty-one and the date of such compliance, and (2) shall report to the state secretary and to the department of corporations and taxation any foreign corporation performing work under such contract or subcontract, and any person, other than a corporation, performing work under such contract or subcontract, and residing or having a principal place of business outside the commonwealth. (*Reference*: M.G.L. c. 30, §39L)

5.2. Code of Conduct.

5.2.1. Chapter 2.117 of the Cambridge Municipal Code, Code of Conduct for **City** Officials and Employees, establishes standards of conduct for officials and employees of the **City**. The **Contractor** is subject to certain provisions contained therein. The **Contractor** shall familiarize itself with the ordinance and act accordingly.

5.3. Quality Assurance.

5.3.1. The **Contractor** shall be responsible for ensuring that it, all Subcontractors, Suppliers, and all persons employed to do the Work under the Contract Documents perform in a professional manner, provide a high quality of service and Work, and perform in accordance with the Contract Documents.

5.4. Supervision.

5.4.1. Competence and Efficiency. The **Contractor** shall supervise, inspect, and direct the Work competently and efficiently, devoting such attention thereto and applying such skills, attention and expertise as may be necessary to perform the Work in accordance with the Contract Documents.

5.4.2. Construction Means, Methods, Techniques, Etc. The **Contractor** shall be solely responsible for and have control over construction means, methods, techniques, sequences, and procedures and for coordinating all portions of the Work under the Contract. Where the Contract Documents refer to particular construction means, methods, techniques, sequences, or procedures or indicate or imply that such are to be used in the Work, such mention is intended only to indicate that the operations of the **Contractor** shall be such as to produce at least the quality of Work implied by the operations described. The actual determination of whether or not the described operations may be safely and suitably employed on the Work shall be the responsibility of the **Contractor**, who shall notify the **Engineer** in writing, prior to implementation, of the actual means, methods, techniques, sequences, or procedures which will be employed on the Work, if these differ from those mentioned in the Contract Documents. All loss, damage, liability or cost of correcting defective work arising from the employment of any construction means, methods, techniques, sequences, or procedures shall be borne by the **Contractor**, notwithstanding that such construction means, methods, techniques, sequences, or procedures are referred to, indicated or implied by the Contract Documents, unless the **Contractor** has given timely notice to the **City** and the **Engineer** in writing that such means, methods, techniques, sequences, or procedures are not safe or suitable, and the **City** has then instructed the **Contractor** in writing to proceed at the **City's** risk.

5.4.3. Variance between the Contract Documents and Statutes, Ordinances, Codes, Rules, and Regulations. The **Contractor** shall promptly notify the **Engineer** and the **City** in writing of any variances between the Contract Documents and statutes, ordinances, codes, rules, and regulations. If the **Contractor,** without written notice to the **Engineer** and the **City,** performs Work knowing that it is contrary to statutes, ordinances, codes, rules, and regulations, the **Contractor** shall assume full responsibility for such Work and shall bear the costs associated therewith, i.e., replacement, repairs, removal, and fines.

5.4.4. Acts and Omissions. The **Contractor** shall be responsible to the **City** for the acts and omissions of all persons performing or supplying the Work.

5.4.5. Inspections. The **Contractor** shall be responsible for inspection of portions of Work already performed under this Contract to determine whether such portions are in proper condition to receive subsequent Work.

5.5. Personnel.

5.5.1. Suitability. The **Contractor** shall provide competent, properly licensed and/or certified, suitably qualified, and reliable personnel to perform the Work required by the Contract Documents. The **Contractor** shall enforce strict discipline and maintain good order at the site at all times. The **Contractor** shall not employ any Subcontractor, Supplier, or other person, whether initially or as a substitute, against whom the **City** may have reasonable objection. Acceptance of any Subcontractor or other person by the **City** shall not constitute a waiver of any right of the **City** to reject defective Work.

5.5.2. Sexual Harassment. The **City** has a policy against sexual harassment. The **Contractor**, Subcontractors, and all other persons responsible for any portion of the Work are subject to the **City's** policy. The **Contractor** shall be responsible for any acts of sexual harassment committed by any persons responsible for any portion of the Work. The **Contractor** shall take appropriate action against any such individuals. Notwithstanding any remedial action taken by the **Contractor**, the **City** reserves the right to enforce its policy.

5.5.3. Weapons and Illegal Drugs. No weapons or illegal drugs are permitted on the Site. It is the responsibility of the **Contractor** to ensure that no weapons or illegal drugs are brought to the Site.

5.5.4. Maximum Work Day and Work Week. (*Reference:* M.G.L. c. 149, §§30 and 34). No laborer, worker, mechanic, foreperson or inspector working within this Commonwealth in the employ of the **Contractor**, Subcontractor or other person doing or contracting to do the whole or part of the work contemplated by the Contract, shall be required or permitted to work more than eight (8) hours in any one day or more than forty-eight (48) hours in any one week, or more than six (6) days in any one week, except in cases of emergency.

5.5.5. Lodging. (*Reference:* M.G.L. c. 149, §25). Every employee under this Contract shall lodge, board and trade where and with whom he or she elects, and neither the **Contractor** nor its agents or employees shall, either directly or indirectly, require as a condition of the employment of any person that the employee shall lodge, board or trade at a particular place or with a particular person.

5.5.6. Wage Rates. (*Reference:* M.G.L. c. 149, §27). Mechanics and apprentices, teamsters, chauffeurs and laborers performing Work shall be paid no less than the minimum rate of wages included in the Project Manual and which are made part of the Contract. They shall continue to be the minimum rate of wages for said employees during the life of the Contract. The **Contractor** shall keep a legible copy of the wage rates posted in a conspicuous place at the site during the life of the Contract. These rates of wages shall include payments by employers to health and welfare plans, pension plans and supplementary unemployment benefit plans as provided in M.G.L. c. 149, §26;, and such payments shall be considered as payments to persons under M.G.L. c. 149, §27 performing work as therein provided. If the **Contractor** does not make payments to a health and welfare plan, a pension plan and a supplementary unemployment benefit plan, where such payments are included in the rates of wages, the **Contractor** shall pay the amount of said payments directly to each employee engaged in the Work. If the **Contractor** pays less than the rate of wages, including payments to health and welfare funds and pension funds, or the equivalent payments in wages to any person performing Work within the classifications as determined by the Commissioner of Labor and Industries, and if the **Contractor** takes or receives for its own use or the use of any other person, as a rebate, refund or gratuity, or in any other guise, any part or portion of the wages, including payments to health and welfare funds and pension funds, or the equivalent payment in wages, paid to such person for Work done or service rendered on the Project, the **Contractor** will be subject to the penalties set forth in M.G.L. c. 149, §27.

5.5.7. Payroll Records of Employees. (*Reference:* M.G.L. c. 149, §27B). The **Contractor** and all Subcontractors who are subject to M.G.L. c. 149, §§27 and 27A shall keep a true and accurate record of all mechanics and apprentices, teamsters, chauffeurs, and laborers performing Work showing the name, address and occupational classification of each such employee, the hours worked by and the wages paid to all such employees. The **Contractor** and the Subcontractors shall submit a copy of said

record to the **City** on a weekly basis.

5.5.7.1. (*Reference:* M.G.L. c. 149, §27B). The **Contractor** and all Subcontractors who are subject to M.G.L. c. 149, §§27 and 27A shall preserve their payroll records for a period of three (3) years from the date of completion of the Contract.

5.5.7.2. (*Reference:* M.G.L. c. 149, §27B). The **Contractor** and all Subcontractors who are subject to M.G.L. c. 149, §§27 and 27A shall furnish to the Commissioner of Labor and Industries and the **City** within fifteen (15) days after completion of their portion of the Work a statement executed by the **Contractor** or Subcontractor or by any authorized officer or employee of the **Contractor** or Subcontractor who supervises the payment of wages in the form found in M.G.L. c.149, §27B.

5.6. Superintendence.

5.6.1. Employment of a Superintendent. The **Contractor** shall employ a competent, properly licensed superintendent, reasonably acceptable to the **City**, and necessary assistants who shall be in attendance at the Site full time during the progress of the Work until the date of Substantial Completion and for such additional time thereafter as the **Engineer** or the **City** may determine to be necessary for the expeditious completion of the Work.

5.6.2. Removal/Replacement of a Superintendent. The **Contractor** shall remove the superintendent if requested to do so in writing by the **City** and shall promptly replace such superintendent with a competent person reasonably acceptable to the **City**. The superintendent shall represent the **Contractor**, and communications given to the superintendent shall be as binding as if given to the **Contractor**. The **Contractor** shall not replace the superintendent without written notice to the **City** and the **Engineer**.

5.6.3. Registered Professional Engineer or Registered Land Surveyor. The **Contractor** shall retain a competent Registered Professional Engineer or Registered Land Surveyor, acceptable to the **Engineer**, who shall establish the exterior lines and required elevations of all structures to be erected on the site and shall establish sufficient lines and grades for the construction of associated Work such as, but not limited to, roads, utilities, and site grading. The Engineer or Land Surveyor shall certify as to the actual location of the constructed facilities in relation to property lines, building lines, easements, and other restrictive boundaries.

5.6.4. Building Grades, Lines, Etc. The **Contractor** shall establish the building grades; lines; levels; and column, wall and partition lines required by the various Subcontractors in laying out their Work.

5.6.5. Coordination and Supervision. The **Contractor** shall coordinate and supervise the Work performed by Subcontractors to the end that the Work is carried out without conflict between trades and so that no trade, at any time, causes delay to the general progress of the Work. The **Contractor** and all Subcontractors shall at all times afford each trade, any separate contractor, or the **City**, every reasonable opportunity for the installation of Work and the storage of materials.

5.6.6. Job Meetings. There shall be job meetings held on a weekly basis, or more often if required by the **City**. The **Contractor** shall arrange for and attend weekly job meetings with the **Engineer** and such other persons as the **Engineer** may from time to time wish to have present. The **Contractor** shall be represented by a principal, project manager, general superintendent or other authorized main office representative, as well as by the **Contractor's** own superintendent. An authorized representative of any Subcontractor or Sub-subcontractor shall attend such meetings if the representative's presence is requested by the **Engineer**. Such representatives shall be empowered to make binding commitments on all matters to be discussed at such meetings, including costs, payments, Change Orders, time schedules and workforce power. Any notices required under the Contract may be served on such representatives.

5.7. Materials, Labor, Equipment, Etc.

5.7.1. Provision of. Unless otherwise provided in the Contract Documents, the **Contractor** shall furnish and assume full responsibility for all materials, equipment, labor, transportation, construction equipment and machinery, tools, appliances, fuel, power, light, heat, telephone, water, sanitary facilities, temporary facilities, and all other facilities and incidentals necessary for the furnishing, performance, testing, start-up, and completion of the Work.

5.7.2. Quality and Use of. All materials and equipment shall be of good quality and new, except as otherwise provided in the Contract Documents. If required by the **Engineer**, the **Contractor** shall furnish satisfactory evidence (including reports of required tests) as to the kind and quality of materials and equipment. All materials and equipment shall be applied, installed, connected, erected, used, cleaned, and conditioned in accordance with instructions of the applicable Supplier, except as otherwise provided in the Contract Documents.

5.7.3. Discrepancies or Defects. If the **Contractor** is unable to perform its Work because of discrepancies or defects in the work of the **City's** own forces or of a separate contractor, the **Contractor** shall immediately notify the **Engineer** and the **City** in writing of the conditions that render unable to so perform. Failure to notify the **Engineer** constitutes an acknowledgment and acceptance of the other work as being fit and proper for integration with the **Contractor's** Work except for latent or non-apparent defects and deficiencies in the other work.

5.8. Contractor's Management and Financial Statement Requirements. (*Reference:* M.G.L. c. 30, §39R)

5.8.1. The words defined herein shall have the meaning stated below whenever they appear in this Paragraph:

5.8.1.1. "**Contractor**" means any person, corporation, partnership, joint venture, sole proprietorship, or other entity awarded a contract pursuant to M.G.L. c.30. §39M, inclusive.

5.8.1.2. "Contract" means any contract awarded or executed pursuant to M.G.L. c. 30, §39M, which is for an amount or estimate amount that exceed the dollar amount set forth in M.G.L. c. 30, §39R.

5.8.1.3. "Records" means books of original entry, accounts, checks, bank statements and all other banking documents, correspondence, memoranda, invoices, computer printouts, tapes, discs, papers and other documents or transcribed information of any type, whether expressed in ordinary or machine language.

5.8.1.4. "Independent Certified Public Account" means a person duly registered in good standing and entitled to practice as a certified public accountant under the laws of the place of his/her residence or principal office and who is in fact independent. In determining whether an accountant is independent with respect to a particular person, appropriate consideration should be given to all relationships between the accountant and that person or any affiliate thereof. Determination of an accountant's independence shall not be confined to the relationships existing in connection with the filing of reports with the **City**.

5.8.1.5. "Audit," when used in regard to financial statement, means an examination of records by an independent certified public accountant in accordance with generally accepted accounting principles and auditing standards for the purpose of expressing a certified opinion thereon, or, in the alternative, a qualified opinion or a declination to express an opinion for stated reasons.

5.8.1.6. "Accountant's Report," when used in regard to financial statements, means a document in which an independent certified accountant indicates the scope of the audit which s/he has made and sets forth his/her opinion regarding the financial statements taken as a whole with listing of

noted exceptions and qualifications, or an assertion to the effect that an overall opinion cannot be expressed. When an overall opinion cannot be expressed the reason therefor shall be stated. An accountant's report shall include as part thereof a signed statement by the responsible corporate officer attesting that management has fully disclosed all material facts to the independent certified public accountant, and that the audited financial statement is a true and complete statement of the financial condition of the contractor.

5.8.1.7. "Management," when used herein, means the chief executive officers, partners, principals or other person or persons primarily responsible for the financial and operational policies and practices of the contractor.

5.8.1.8. Accounting terms, unless otherwise defined herein shall have a meaning in accordance with generally accepted accounting principles and auditing standards.

5.8.2. The contractor shall make, and keep for at least six (6) years after final payment, books, records, and accounts which in reasonable detail accurately and fairly reflect the transactions and dispositions of the contractor, and

5.8.3. until the expiration of six (6) years after final payment, the office of inspector general, and the deputy commissioner of capital planning and operations shall have the right to examine any books, documents, papers or records of the contractor or of his/her subcontractors that directly pertain to, and involve transactions relating to, the contractor or his/her subcontractors, and

5.8.4. the contractor shall describe any change in the method of maintaining records or recording transactions which materially affect any statements filed with the **City**, including in his/her description the date of the change and reasons therefor, and shall accompany said description with a letter from the contractor's independent certified public accountant approving or otherwise commenting on the changes, and

5.8.5. the contractor has filed a statement of management on internal accounting controls as set forth below prior to the execution of the contract, and

5.8.6. the contractor has filed prior to the execution of the contract and will continue to file annually, an audited financial statement for the most recent completed fiscal year as set forth below.

5.8.7. The contractor shall file with the **City** a statement of management as to whether the system of internal accounting controls of the contractor and its subsidiaries reasonably assures that:

5.8.7.1. transactions are executed in accordance with management's general and specific authorization;

5.8.7.2. transactions are recorded as necessary

5.8.7.2.1. to permit preparation of financial statements in conformity with generally accepted accounting principles, and

5.8.7.2.2. to maintain accountability for assets;

5.8.7.3. access to assets is permitted only in accordance with management's general or specific authorization; and

5.8.7.4. the recorded accountability for assets is compared with the existing assets at reasonable intervals and appropriate action was taken with respect to any difference.

5.8.7.5. The contractor shall also file with the **City** a statement prepared and signed by an independent certified public accountant stating that s/he has examined the statement of management

on internal accounting controls, and expressing an opinion as to:

5.8.7.5.1. whether the representation of management in response to this paragraph and paragraphs 5.8.2. through 5.8.6 above are consistent with the result of management's evaluation of the system of internal accounting controls; and

5.8.7.5.2. whether such representations of management are, in addition, reasonable with respect to transactions and assets in amounts which would be material when measured in relation to the applicant's financial statements.

5.8.8. The contractor shall annually file with the Commissioner of Capital Planning and Operations during the term of the contract a financial statement prepared by an independent certified public accountant on the basis of an audit by such accountant. The final statement filed shall include the date of final payment. All statements shall be accompanied by an accountant's report. Such statements shall be made available to the **City** upon request.

5.9. Taxes.

5.9.1. The **Contractor** shall pay all sales, consumer, use, and other similar taxes for the Work or portions thereof which are provided by the **Contractor** which are legally enacted when bids are received, whether or not yet effective or merely scheduled to go into effect. However, the **Contractor** shall not pay, and the **City** shall not reimburse or pay the **Contractor** for, any sales taxes for building supplies or materials for which an exemption is provided in M.G.L. c. 64H, §6(f). The **City's** tax exemption number to be used by the **Contractor** in this regard is E046001383.

5.10. Permits, Licenses, and Fees.

5.10.1. Unless otherwise provided, the **Contractor** shall obtain and pay the fees for all permits, licenses, and inspections which are necessary for the proper execution and completion of the Work and which are customarily secured after execution of the Contract and which are legally required. All fees for permits, licenses, and inspections required by any **City** department shall be waived.

5.11. Notices Required By Statutes, Ordinances, Codes, Rules, Regulations, and Orders of the City.

5.11.1. The **Contractor** shall give notices required by statutes, ordinances, codes, rules, regulations, and orders of the **City** bearing on performance of the Work.

5.12. Additional Information from Engineer.

5.12.1. The **Contractor** shall perform the Work in accordance with the Contract Documents and submittals approved pursuant to Article 4.

5.12.2. The **Contractor** shall give the **Engineer** timely notice of any additional Drawings, Specifications, or instructions required to define the Work in greater detail, or to permit the proper progress of the Work.

5.12.3. The **Contractor** shall not proceed with any Work not clearly and consistently defined in detail in the Contract Documents, but shall request additional drawings or instructions from the **Engineer** as provided in the previous Paragraph. If the **Contractor** proceeds with such Work without obtaining further drawings, Specifications, or instructions, the **Contractor** shall correct Work incorrectly done at the **Contractor's** own expense.

5.13. "Or equal."

5.13.1. **Requirements.** (*Reference:* M.G.L. c. 30, §39M(b)). Where products or

materials are specified or described by manufacturer name, trade name, or catalog reference, the words "or approved equal" shall be understood to follow. An item shall be considered equal to the item so named or described if, in the opinion of the **Engineer**:

5.13.1.1. it is at least equal in quality, durability, appearance, strength, and design;

5.13.1.2. it performs at least equally the function imposed by the general design for the Work;

5.13.1.3. it conforms substantially, even with deviations, to the detailed requirements for the items as indicated by the Specifications.

5.13.2. Net Savings. No proposed substitution will be permitted unless the **Contractor** certifies that the proposed substitution will yield a net savings to the **City** and will not extend the Contract Time.

5.13.3. Contractor's Expense. Any structural or mechanical changes made necessary to accommodate substituted equipment under this paragraph shall be at the expense of the **Contractor** or Subcontractor responsible for the Work item.

5.13.3.1. Any additional cost, or any loss or damage arising from the substitution of any material or any method for those originally specified shall be borne by the **Contractor**, notwithstanding approval or acceptance of such substitution by the **City** or the **Engineer**, unless such substitution was made at the written request or direction of the **City** or the **Engineer**.

5.13.3.2. All data to be provided by the **Contractor** in support of any proposed "or equal" or substitute item will be at the **Contractor's** expense.

5.13.4. Meeting Requirements. The **Contractor** shall be responsible for determining that all materials furnished for the Work meet all requirements of the Contract Documents. The **Engineer** may require the **Contractor** to produce reasonable evidence that a material meets such requirements, such as certified reports of past tests by qualified testing laboratories, reports of studies by qualified experts, or other evidence which, in the opinion of the **Engineer,** would lead to a reasonable certainty that any material used, or proposed to be used, in the Work meets the requirements of the Contract Documents. All such data shall be furnished at the **Contractor's** expense. This provision shall not require the **Contractor** to pay for periodic testing of different batches of the same material, unless such testing is specifically required by the Contract Documents to be performed at the **Contractor's** expense.

5.13.5. Named Manufacturer's Product. In all cases in which a manufacturer's name, trade name, or other proprietary designation is used in connection with materials or articles to be furnished under this Contract, whether or not the phrase "or equal" is used after such name, the **Contractor** shall furnish the product of the name manufacturer(s) without substitution, unless a written request for a substitute has been submitted by the **Contractor** and approved in writing by the **Engineer** as provided in the following paragraph.

5.13.6. Deviations. If the **Contractor** proposes to use a material which while suitable for the intended use, deviates in any way from the detailed requirements of the Contract Documents, the **Contractor** shall inform the **Engineer** in writing of the nature of such deviations at the time the material is submitted for approval and shall request written approval of the deviation from the requirements of the Contract Documents.

5.13.7. Rejection of Deviations. In requesting approval of deviations or substitutions, the **Contractor** shall provide, upon request, evidence leading to a reasonable certainty that the proposed substitution or deviation will provide a quality of result at least equal to that otherwise attainable. If, in the opinion of the **Engineer**, the evidence presented by the **Contractor** does not provide a sufficient basis for such reasonable certainty, the **Engineer** may reject such substitution or deviation without further

investigation.

5.13.8. Consistent Character and Quality of Design. The Contract Documents are intended to produce a building of consistent character and quality of design. All components of the building including visible items of mechanical and electrical equipment have been selected to have a coordinated design in relation to the overall appearance of the building. The **Engineer** shall judge the design and appearance of proposed substitutes on the basis of their suitability in relation to the overall design of the Project, as well as for their intrinsic merits. The **Engineer** will not approve as equal to materials specified proposed substitutes which, in the **Engineer's** opinion, would be out of character, obtrusive, or otherwise inconsistent with the character or quality of design of the Project. In order to permit coordinated design of color and finishes the **Contractor** shall, if required by the **Engineer**, furnish the substituted material in any color, finish, texture, or pattern which would have been available from the manufacturer originally specified, at no additional cost to the **City**.

5.13.9. Warranty. The warranties provided herein shall be in addition to and not in limitation of any other warranty required by the Contract Documents or otherwise prescribed by law.

5.13.10. Engineer's Approval. The **Engineer** will be the sole judge of acceptability. No "or equal" or substitute will be ordered, installed, or utilized without the **Engineer's** prior written acceptance which will be evidenced by either a Change Order or an approved Shop Drawing. The **City** may require the **Contractor** to furnish at the **Contractor's** expense a special performance guarantee or other surety with respect to any "or equal" or substitute. The **Engineer** will record the time required by the **Engineer** and its consultants in evaluating substitutes proposed or submitted by the **Contractor** and in making changes in the Contract Documents (or in the provisions of any other direct contract with the **City** for work on the Project) occasioned thereby. Whether or not the **Engineer** accepts a substitute item so proposed or submitted by the **Contractor**, the **Contractor** shall reimburse the **City** for the charges of the **Engineer** and its consultants for evaluating each such proposed substitute item.

5.14. Substitute Construction Methods or Procedures.

5.14.1. If a specific means, method, technique, sequence, or procedure of construction is shown or indicated in and expressly required by the Contract Documents, the **Contractor** may furnish or utilize a substitute means, method, technique, sequence or procedure of construction acceptable to the **Engineer**. The **Contractor** shall submit sufficient information to allow the **Engineer**, in the **Engineer's** sole discretion, to determine whether the substitute proposed is equivalent to that expressly called for by the Contract Documents.

5.15. Contractor's Progress Schedule.

5.15.1. Before Starting Construction. Within ten (10) days after the date of the Notice to Proceed, the **Contractor** shall submit to the **Engineer** for review:

5.15.1.1. a preliminary progress schedule indicating the times (number of days or dates) for starting and completing the various stages of the Work;

5.15.1.2. a preliminary schedule of Shop Drawing and Sample submittals which will list each required submittal and the times for submitting, reviewing, and processing such submittal; and

5.15.1.3. a preliminary schedule of values for all of the Work which will include quantities and prices of items aggregating the Contract Sum and will subdivide the Work into component parts in sufficient detail to serve as the basis for progress payments during construction. Such prices will include and appropriate amount of overhead and profit applicable to each item of Work.

5.15.2. Review of Progress Schedule. At least ten (10) days prior to the commencement of

construction, the **Engineer**, the **Contractor,** and any other appropriate persons will meet to review and discuss the acceptability to the **Engineer** of the progress schedule. The **Contractor** w ill have an additional ten (10) days to make corrections and adjustments and to complete and resubmit the schedule. No progress payment shall be made to the **Contractor** until the schedule is submitted to and acceptable to the **Engineer** as provided below.

5.15.3. Acceptability of Progress Schedule. The progress schedule will be acceptable to the **Engineer** if, according to the **Engineer**, it provides an orderly progression of the Work to completion within any specified time frame, but such acceptance will neither impose on the **Engineer** responsibility for the sequencing, scheduling, or progress of the Work nor interfere with or relieve the **Contractor** from the **Contractor's** full responsibility therefor. The **Contractor's** schedule of Submittals must be acceptable to the **Engineer** if it provides a workable arrangement for reviewing and processing the required Submittals. The **Contractor's** schedule of values must be acceptable to the **Engineer** as to form and substance.

5.15.4. Sepia and Copies. After the **Engineer** has approved the schedule, the **Contractor** shall submit to the **Engineer** one (1) sepia and four (4) copies bearing the **Contractor's** stamp of approval as a representation to the **City** that the **Contractor** has determined or verified all data on that progress schedule and that the **Contractor**, the Subcontractors and Suppliers have reviewed and coordinated the sequences in that progress schedule with the requirements of the Work.

5.15.5. Adjustment of Schedule. The **Contractor** shall adhere to the established progress schedule which may be adjusted from time to time as follows: the **Contractor** shall submit to the **Engineer** for acceptance proposed adjustments in the progress schedule that will not change the Contract Time. Such adjustments will conform generally to the progress schedule then in effect and will comply with any provisions of the requirements applicable thereto.

5.15.6. During Construction. The **Contractor** shall submit monthly progress schedules to the **Engineer**. The schedules shall stay current with the **Contractor's** approach to the Work remaining.

5.15.7. Schedule of Submittals. The **Contractor** shall prepare and keep current, for the **Engineer's** approval, a schedule of Submittals which is coordinated with the **Contractor's** construction schedule and allows the **Engineer** reasonable time to review Submittals.

5.16. Project Coordination.

5.16.1. In General. The **Contractor** shall be responsible for the proper coordination of the Work of all of the trades.

5.16.2. Coordination with Subcontractors. The **Contractor** shall coordinate the work of each Subcontractor with the Work of every other Subcontractor whose Work affects the other.

5.16.3. Coordination with the City's Own Forces or Separate Contractors. The **Contractor** shall coordinate its operations with those of the **City's** own forces or separate contractors. The **Contractor** shall provide the **City's** own forces and separate contractors a reasonable opportunity for the handling, unloading and storage of their materials and equipment and execution of their work. The **Contractor** shall connect and coordinate its Work with theirs.

5.16.4. Coordination with Utility Companies. The **Contractor** shall coordinate its operations with all the appropriate utility companies to assure that the utilities required on the Project are available and functioning properly pursuant to the requirements of the Contract Documents.

5.17. Project Photographs.

5.17.1. In General. The **Contractor** shall take, at its own expense, interior and exterior photographs at the site, from different vantages as directed by the **Engineer** or the **City**, before beginning

any Work and thereafter on the first work day of each month until final completion of the Work, including final Site photos. The photographs shall be taken by a skilled commercial photographer. The number of photographs required shall be at the discretion of the **City** or the **Engineer**.

5.17.2. Prints and Negatives. Within fourteen (14) days after the photographs have been taken, the **Contractor** shall cause prints to be made and delivered to the **City** and the **Engineer**. All photographs shall be 8" x 10". Each print shall state the date of the photograph, the name of the Project, the description of the view and the name and address of the photographer. The **City** shall receive all the negatives and one glossy print. The **Engineer** shall receive one glossy print.

5.17.3. Failure to Comply. Should the **Contractor** fail to adhere to any requirement set forth in the previous two paragraphs, the **City** may have the photographs taken at the **Contractor's** expense or receive a set-off against the **Contractor's** next application for payment.

5.18. Record Documents and Samples at the Site.

5.18.1. The **Contractor** shall maintain in a safe place at the site one record copy of all Drawings, Specifications, Modifications, Change Orders, Work Change Directives, Field Orders and written interpretations and clarifications in good order and annotated to show all changes made during construction. These record documents together with all approved Samples and a counterpart of all approved Shop Drawings will be available to the **Engineer** for reference. Upon completion of the Work, these record documents, Samples and Shop Drawings will be delivered by the **Contractor** to the **Engineer** for the **City**.

5.19. Submittals.

5.19.1. Purpose. The purpose of Submittals is to demonstrate for those portions of the Work for which Submittals are required the way the **Contractor** proposes to conform to the information given and the design concept expressed in the Contract Documents.

5.19.2. Submittal Procedure. Within ___days from the Notice to Proceed, the **Contractor** shall submit to the **Engineer** a completed Submittals schedule. The **Contractor** shall review, approve, and submit to the **Engineer** Submittals required by the Contract Documents with reasonable promptness and in such sequence as to cause no delay in the Work or in the activities of the **City** or of separate contractors. Submittals made by the **Contractor** which are not required by the Contract Documents may be returned without action. The schedules shall be updated and resubmitted each month. All Submittals will be identified as the **Engineer** may require and in the number specified in the General Requirements. The data shown on the Shop Drawings will be complete with respect to quantities, dimensions, specified performance and design criteria, materials, and similar data to show the **Engineer** the materials and equipment that the **Contractor** proposes to provide and to enable the **Engineer** to review the information for the limited purposes stated below.

5.19.3. Samples. The **Contractor** shall also submit Samples to the **Engineer** for review and approval in accordance with said accepted schedule of Submittals. Each Sample will be identified clearly as to material, Supplier, pertinent data such as catalog numbers and the use for which it is intended and otherwise as the **Engineer** may require to enable the **Engineer** to review the Submittal for the limited purposed stated below. The numbers of each Sample to be submitted will be as specified in the Specifications. Unless otherwise specified in the Specifications, three (3) specimens of each Sample shall be submitted.

5.19.3.1. The Samples shall be of sufficient size to permit proper evaluation of material. Where variations in color or other characteristics are to be expected, samples showing the minimum range of variation shall be submitted. Materials exceeding the range of variation of the approved Samples will not be approved on the Work.

5.19.3.2. All costs associated with delivery of Samples will paid by the **Contractor**.

5.19.4. Contractor's Verifications. Before submitting each Submittal, the **Contractor** shall have determined and verified:

5.19.4.1. all field measurements, quantities, dimensions, specified performance criteria, installation requirements, materials, catalog numbers, and similar information with respect thereto;

5.19.4.2. all materials with respect to intended use, fabrication, shipping, handling, storage, assembly, and installation pertaining to the performance of the Work; and

5.19.4.3. all information relative to the **Contractor's** sole responsibilities in respect of means, methods, techniques, sequences, and procedures of construction and safety precautions and programs incident thereto.

5.19.5. Contractor's Representations. By approving and providing Submittals, the **Contractor** thereby represents that the **Contractor** has determined and verified all dimensions, quantities, field dimensions, relations to existing Work, coordination with Work to be installed later, coordination with information on previously accepted Submittals and verification of compliance with all the requirements of the Contract Documents. The accuracy of all such information is the responsibility of the **Contractor**. In reviewing Submittals, the **Engineer** shall be entitled to rely upon the **Contractor's** representation that such information is correct and accurate.

5.19.6. Coordination. The **Contractor** shall also have reviewed and coordinated each Submittal with other Submittals and with the requirements of the Work and the Contract Documents.

5.19.7. Stamp or Specific Written Indication. Each Submittal will bear a stamp or specific written indication that the **Contractor** has satisfied the **Contractor's** obligations under the Contract Documents with respect to the **Contractor's** review and approval of that Submittal.

5.19.8. Written Notice of Variations. At the time of each Submittal, the **Contractor** shall give the **Engineer** specific written notice of such variations, if any, that the Submittal may have from the requirements of the Contract Documents. Such notice is to be in a written communication separate from the Submittal. Moreover, the **Contractor** sha ll make a specific notation on each Submittal to the **Engineer** for review and approval of each such variation.

5.19.9. Review and Approval by the Engineer. The **Contractor** shall perform no portion of the Work requiring a Submittal until the respective Submittal has been approved by the **Engineer**. Such Work shall be in accordance with approved Submittals.

5.19.9.1. The **Engineer** will review and approve Submittals in accordance with the schedule of Submittals accepted by the **Engineer** as required above. The **Engineer's** review and approval will be only to determine if the items covered by the Submittals will, after installation or incorporation in the Work, conform to the information given in the Contract Documents and be compatible with the design concept of the completed Project as a functioning whole as indicated in the Contract Documents. The **Engineer's** review and approval will not extend to means, method, technique, sequences, or procedures of construction (except where a particular means, method, technique, sequences or procedures of construction is specifically and expressly called for by the Contract Documents) or to safety precautions or programs incident thereto. The review and approval of a separate item as such will not indicate approval of the assembly in which the item functions.

5.19.10. Deviations. The **Contractor** shall not be relieved of responsibility for deviations from requirements of the Contract Documents by the **Engineer's** approval of Submittals unless the **Contractor** has specifically informed the **Engineer** in writing of such deviation at the time of Submittal and the **Engineer** has given written approval to the specific deviation. The **Contractor** shall not be

relieved of responsibility for errors or omissions in Submittals by the **Engineer's** approval thereof.

5.19.11. Revisions. The **Contractor** shall make corrections required by the **Engineer** and shall return the required number of corrected copies of Submittals and submit as required new Submittals for review and approval. The **Contractor** shall direct specific attention, in writing or on resubmitted Submittals, to revisions other than those requested by the **Engineer** on previous Submittals. Unless such written notice has been given, the **Engineer's** approval of a resubmitted Submittal shall not constitute approval of any changes not requested on the prior Submittal.

5.19.12. Related Work. Where a Submittal is required by the Contract Documents or the schedule of Submittals accepted by the **Engineer**, any related Work performed prior to the **Engineer's** review and approval of the pertinent Submittal will be at the sole expense and responsibility of the **Contractor**.

5.19.13. Informational Submittals. Informational Submittals upon which the **Engineer** is not expected to take responsive action may be so identified in the Contract Documents.

5.19.14. Certification. When professional certification of performance criteria of materials, systems or equipment is required by the Contract Documents, the **City** shall be entitled to rely upon such certifications, and neither the **City** nor the **Engineer** shall be expected to make any independent examination with respect thereto.

5.20. Continuing the Work.

5.20.1. The **Contractor** shall carry on the Work and adhere to the progress schedule during all disputes or disagreements with the **City**. No Work shall be delayed or postponed pending resolution of any disputes or disagreements, except as otherwise provided herein or as the **City** and the **Contractor** may agree in writing.

5.21. Use of Site; Access to Work.

5.21.1. The right of possession of the premises and the improvements made thereon by the **Contractor** shall remain at all times in the **City**. The **Contractor's** right to entry and use thereof arises solely from the permission granted by the **City** under the Contract Documents. The **Contractor** shall confine the **Contractor's** apparatus, the storage of materials, and the operations of the **Contractor's** workers to limits indicated by law, ordinance, the Contract Documents and permits and/or directions of the **Engineer** and shall not unreasonably encumber the premises with the **Contractor's** materials. The **City** shall not be liable to the **Contractor**, the Subcontractors, Suppliers, or anyone else with respect to the conditions of the premises, except for a condition caused directly and solely by the negligence of the **City**.

5.21.2. At all times, the **City** and the **Engineer** shall have access to the Work.

5.22. Protection of Persons and Property.

5.22.1. In General. The **Contractor** shall be responsible for initiating, maintaining, and supervising all health and safety precautions and programs in connection with the performance of the Contract. The **Contractor** is responsible for the implementation of all Federal, State, and local health and safety requirements.

5.22.2. The **Contractor** shall take reasonable precautions for safety of, and shall provide reasonable protection to prevent damage, injury, or loss to:

5.22.2.1. employees on the site and other persons who may be affected thereby;

5.22.2.2. the Work, materials, and equipment to be incorporated therein, whether in storage on or off the site, under the care, custody or control of the **Contractor**, Subcontractors,

or Sub-subcontractors;

5.22.2.3. other property at the site or adjacent or in close proximity thereto, such as trees, shrubs, lawns, walks, pavements, roadways, structures, and utilities not designated for removal, relocation, or replacement in the course of construction; and

5.22.2.4. any other property of the **City**, whether or not forming part of the Work, located at the site or adjacent thereto in areas to which the **Contractor** has access.

5.22.3. Notices and Compliance. The **Contractor** shall give notices and comply in all other respects with applicable laws, ordinances, rules, regulations, codes, and lawful orders of public authorities bearing on the safety of persons or property or their protection from damage, injury, or loss. The **Contractor** shall notify owners of adjacent and nearby properties of underground facilities and utility owners when prosecution of the Work may affect them and shall cooperate with them in the protection, removal, relocation, and replacement of their property.

5.22.4. Erection and Maintenance of Safeguards. The **Contractor** shall erect and maintain, as required by existing conditions and the terms of the Contract, reasonable safeguards for safety and protection, including posting danger signs and other warnings against hazards, promulgating safety regulations and notifying owners and users of adjacent and nearby sites and utilities.

5.22.5. Hazardous Materials and Equipment. When use or storage of explosives or other hazardous materials or equipment or unusual methods are necessary for execution of the Work, the **Contractor** shall exercise utmost care and carry on such activities under the supervision of properly qualified personnel.

5.22.6. Damage to Property. The **Contractor** shall promptly remedy damage and loss to property referred to above. If the damage or loss is due in whole or in part to the **Contractor's** failure to take the precautions required herein, the **Contractor** shall bear the cost, subject to any reimbursement to which the **Contractor** is entitled under property insurance required by the Contract Documents. The **Contractor** shall be fully and solely responsible for all Work and other operations carried out on adjacent properties. The insurance required under Article 8 shall cover such Work or operations, and the **Contractor** shall indemnify and defend the **City**, the **Engineer**, and the owners of such adjacent or nearby properties from and against all claims, suits, losses, or costs arising out of such Work or operations.

5.22.7. Fire Protection Equipment and Services. The **Contractor** shall provide and maintain in good operating condition suitable and adequate fire protection equipment and services and shall comply with all reasonable recommendations regarding fire protection made by the representatives of the fire insurance company carrying insurance on the Work or by the local fire chief or fire marshal. The area within the site limits shall be kept orderly and clean and all combustible rubbish shall be promptly removed from the site.

5.22.8. Protection of Excavations, Trenches, Etc. The **Contractor** shall at all times protect excavations, trenches, buildings and materials from rain water, ground water, backup or leakage of sewers, drains and other piping, and from water of any other origin and shall remove promptly any accumulation of water. The **Contractor** shall provide and operate all pumps, piping, and other equipment necessary to this end.

5.22.9. Snow and Ice Removal. The **Contractor** shall remove snow and ice which might result in damage or delay.

5.22.10. Safety Representative. The **Contractor** shall designate a qualified and experienced safety representative at the site whose duties and responsibilities shall be the prevention of accidents and the maintaining and supervising of safety precautions and programs.

5.22.11. Weather Protection. (*Reference:* M.G.L. c. 149, §44F(1)). The **Contractor** shall install weather protection and furnish adequate heat in the protected area from November 1 through March 31.

5.22.12. Security. The **Contractor** shall provide, within the Contract Sum, a sufficient number of security personnel at the Site at all times when the **Contractor's** personnel are not present, from commencement of the Work until Substantial Completion to assure that the Site, the facility, and the Work, and all materials and equipment stored at the Site are fully and completely protected against loss or damage due to vandalism, theft, or malicious mischief. If the **Contractor** elects, in addition, to use guard dogs for this purpose, each dog shall at all times be accompanied by an adult handler. If the **Contractor** fails to comply with the requirements of this paragraph, then the **City** may provide appropriate security and charge the cost thereof to the **Contractor**. The **City's** provision of such security, or failure to do so, shall not relieve the **Contractor** of its responsibility to pay for loss or damage due to vandalism, theft, or malicious mischief at the Site.

5.22.13. Hazard Communication Programs. The **Contractor** shall be responsible for coordinating any exchange of material safety data sheets or other hazard communications information required to be made available to or exchanged between or among employers at the site in accordance with laws, codes and regulations.

5.22.14. Noise Pollution Control. The **Contractor** shall comply with all applicable provisions of Cambridge Municipal Code Chapter 8.16.

5.23. Cutting and Patching.

5.23.1. In General. Unless otherwise provided in the Contract Documents, the **Contractor** shall be responsible for cutting, fitting, or patching required to complete the Work or to make its parts fit together properly, including the work of the City or of separate contractors.

5.23.2. Damage to Work of City or of Separate Contractor. The **Contractor** shall not damage or endanger a portion of the Work or fully or partially completed construction of the **City** or separate contractors by cutting, patching, or otherwise altering such construction, or by excavation. The **Contractor** shall not cut or otherwise alter such construction by the **City** or a separate contractor except with prior written consent of the **City** and of such separate contractor; such consent shall not be unreasonably withheld. The **Contractor** shall not unreasonably withhold from the **City** or a separate contractor the **Contractor's** consent to cutting or otherwise altering the Work.

5.23.3. Damage Caused by Contractor. Should the **Contractor** cause damage to the work or property of any separate contractor at the Site, or should any claim arising out of the **Contractor's** performance of Work at the Site be made by any separate contractor against the **Contractor**, the **City**, the **Engineer**, or any of the **Engineer's** consultants, the **Contractor** shall promptly attempt to settle with such other contractor by agreement, or to otherwise resolve the dispute by arbitration or at law. The **Contractor** shall, to the fullest extent permitted by laws and regulations, indemnify and hold harmless the **City**, the **Engineer**, and the **Engineer's** consultants from and against all claims, damages, losses and expenses (including, but not limited to, fees of engineers, Engineers, attorneys and other professionals, and court and arbitration or mediation costs) arising directly, indirectly or consequentially out of any action, legal or equitable, brought by any separate contractor against the **City**, the **Engineer**, or any of the **Engineer's** consultants, to the extent based on a claim arising out of the **Contractor's** performance of the Work. Should a separate contractor cause damage to the Work or property of the **Contractor** or should the performance of work by any separate contractor at the site give rise to any other claim, the **Contractor** shall not institute any action, legal or equitable, against the **City**, the **Engineer**, or any of the **Engineer's** consultants, or permit any action against any of them to be maintained and continued in its name or for its benefit in any court or before any arbiter which seeks to impose liability on or to recover damages from the **City**, the **Engineer**, or any of the **Engineer's** consultants, on account of any such damage or claim. If the **Contractor** is delayed at any time in performing or furnishing Work by any act or neglect of a separate contractor and the City and the Contractor are unable to agree as to the extent of

any adjustment in the Contract Time attributable thereto, the **Contractor** may make a claim for an extension of time in accordance with Article 16. An extension of the Contract Time shall be the **Contractor's** exclusive remedy with respect to the **City**, the **Engineer**, and the **Engineer's** consultants, for any delay, disruption, interference, or hindrance caused by any separate contractor.

5.24. Cleaning Up.

5.24.1. During the progress of the Work, the **Contractor** shall keep the premises and surrounding area free from accumulation of waste materials and rubbish caused by operations under the Contract or other debris. At the completion of the Work, the **Contractor** shall remove from and about the Project all waste materials, rubbish, debris, the **Contractor's** tools, construction equipment, machinery and surplus materials. The **Contractor** shall leave the site clean and ready for use by the **City** at Substantial Completion of the Work. Immediately prior to the **Engineer's** inspection for Substantial Completion, the **Contractor** shall completely clean the premises. Concrete and ceramic surfaces shall be cleaned and washed. Resilient coverings shall be cleaned, waxed and buffed. Woodwork shall be dusted and cleaned. Sash, fixtures and equipment shall be thoroughly cleaned. Stains, spots, dust, marks and smears shall be removed from all surfaces. Hardware and all metal surfaces shall be cleaned and polished. Glass and plastic surfaces shall be thoroughly cleaned by professional window cleaners. All damaged, broken or scratched glass or plastic shall be replaced by the **Contractor** at the **Contractor's** expense. The **Contractor** shall restore to original condition all property not designated for alteration by the Contract Documents.

5.24.2. If the **Contractor** fails to clean up as provided herein, the **City** may do so and charge the cost thereof to the **Contractor**.

5.25. Royalties and Patents.

5.25.1. The **Contractor** shall pay all license fees and royalties and assume all costs incident to the use in the performance of the Work or the incorporation in the Work of any invention, design, process, product, or device which is the subject of patent rights or copyrights held by others. To the fullest extent permitted by law, the **Contractor** shall indemnify and hold harmless the **City** and the **Engineer** from and against all claims, costs, losses, and damages arising out of or resulting from any infringement of patent rights or copyrights incident to the use in the performance of the work or resulting from the incorporation in the work of any invention, design, process, product, or device not specified in the Contract Documents.

5.26. Contractor's Obligation to Perform.

5.26.1. The **Contractor's** obligation to perform and complete the Work in accordance with the Contract Documents is absolute. None of the following will constitute an acceptance of Work that is not in accordance with the Contract Documents or a release of the **Contractor's** obligation to perform the Work in accordance with the Contract Documents:

5.26.1.1. observations by the **Engineer**;

5.26.1.2. recommendation of any progress or final payment by the **Engineer**;

5.26.1.3. the issuance of a certificate of Substantial Completion or any payment by the **City** to the **Contractor** under the Contract Documents;

5.26.1.4. use or occupancy of the Work, Project, or Site, or any part thereof, by the **City**;

5.26.1.5. any acceptance by the **City** or any failure to do so;

5.26.1.6. any review and approval of a Shop Drawing or Sample submittal or the issuance of a notice of acceptance by the **Engineer**;

5.26.1.7. any inspection, test, or approval by others; or

5.26.1.8. any correction of defective Work by the **City**.

5.27. Indemnification and Covenant Not To Sue.

5.27.1. To the fullest extent permitted by law, the **Contractor** shall assume the defense of, indemnify and hold harmless the **City**, the **Engineer**, the **Engineer's** consultants and agents and employees of any of them from and against claims, damages, losses, and expenses, including, but not limited, to attorneys' fee, arising out of or resulting from performance of the Work, provided that such claim, damage, loss, or expense is attributable to bodily injury, sickness, disease, or death, or to injury to or destruction of tangible property (other than the Work itself) including loss of use resulting therefrom caused in whole or in part by alleged negligent acts or omissions of the **Contractor**, a Subcontractor, anyone directly or indirectly employed by them or anyone for whose acts they may be liable, regardless of whether or not such claim, damage, loss, or expense is caused in part by a party indemnified hereunder. Such obligation shall not be construed to negate, abridge, or reduce other rights or obligations of indemnity which would otherwise exist as to a party or person described in this paragraph.

5.27.2. In claims against any person or entity indemnified under the foregoing paragraph by an employee of the **Contractor**, a Subcontractor, anyone directly or indirectly employed by them or anyone for whose acts they may be liable, the indemnification obligation under the foregoing paragraph shall not be limited by a limitation on the amount or type of damages, compensation or benefits payable by or for the **Contractor** or a Subcontractor under Workers' Compensation laws, disability benefit acts or other employee benefit acts.

5.27.3. The obligations of the **Contractor** in this Article shall not extend to the liability of the **Engineer**, the **Engineer's** consultants, and agents or employees of any of them arising out of (1) the preparation of maps, Drawings, opinions, reports, surveys, Change Orders, designs, or Specifications, or (2) directions or instructions given by the **Engineer**, the **Engineer's** consultants and agents or employees of any of them, provided such instructions or directions are the primary cause of the injury or damage.

5.27.4. The **Contractor**, or any successor, assign, or subrogee of the **Contractor** agrees not to bring any civil suit, action, or other proceeding in law, equity or arbitration against the **Engineer**, or the officers, employees, agents, or consultants of the **Engineer**, for the enforcement of any action which the **Contractor** may have arising out of or in any manner connected with the Work. The **Contractor** shall assure that this covenant not to sue is contained in all subcontracts and sub-subcontracts of every tier and shall assure its enforcement. The **Engineer**, its officers, employees, agents, and consultants are intended third-party beneficiaries of this covenant not to sue, and are entitled to enforce this covenant in law or equity.

5.28. Survival of Obligations.

5.28.1. All representations, indemnifications, warranties, and guarantees made in, required by or given in accordance with the Contract Documents, as well as all continuing obligations indicated in the Contract Documents, will survive final payment, completion and acceptance of the Work and termination or completion of the Contract.

ARTICLE 6 SUBCONTRACTORS

6.1. Use of Subcontractors.

6.1.1. The **Contractor** shall use the Subcontractors named in the **Contractor's** Bid.

6.2. Substitution of Subcontractors.

6.2.1. The **Contractor** shall not substitute another Subcontractor therefor without notice to the **City** and the **City's** prior written consent of such substitution.

6.3. Names of Subcontractors.

6.3.1. Upon execution of the Contract with the **City**, the **Contractor** shall provide in writing to the **City**, through the **Engineer,** the names, addresses, telephone numbers, and fax numbers of all persons proposed for each principal portion of the Work.

6.4. Objections to Subcontractors.

6.4.1. The **Contractor** shall not use any Subcontractor against whom the **City** has a reasonable objection. The **Contractor** shall not be required to contract with any person or entity against whom it has a reasonable objection.

6.5. Form of the Subcontract.

6.5.1. All Work performed by a Subcontractor shall be through an appropriate subcontract. The form of subcontract shall be submitted to the **Purchasing Agent** for her approval, which shall not be unreasonably withheld or delayed.

6.6. Content of the Subcontract.

6.6.1. In addition to all statutorily mandated provisions and provisions required elsewhere in the Contract Documents, each subcontract shall expressly provide that:

6.6.1.1. Each subcontract agreement for a portion of the Work is assigned by the **Contractor** to the **City** provided that:

6.6.1.1.1. the assignment is effective only after termination of the Contract by the **City** or the **Contractor** and only for those subcontract agreements which the **City** accepts by notifying the Subcontractor in writing; and

6.6.1.1.2. the assignment is subject to the prior rights of the surety, if any, obligated under bond relating to the Contract.

6.6.1.2. Each Subcontractor is bound by the requirements of the Contract Documents for the express benefit of the **City.**

6.6.1.3. Each Subcontractor shall assume toward the **Contractor** all the obligations which the **Contractor** assumes toward the **City** and the **Engineer**, unless otherwise provided by law.

ARTICLE 7 PERFORMANCE AND PAYMENT BONDS

7.1. Form of Bonds.

7.1.1. The performance and labor and material or payment bonds shall be in the form required by the **City**, copies of which are included in the Project Manual. The **City** reserves the right to reject any bond which does not conform to the **City's** requirements.

7.2. Furnished by the Contractor.

7.2.1. (*Reference:* M.G.L. c. 30, §39M(c), M.G.L. c. 149, §29). The **Contractor** shall furnish a performance bond and a labor and materials or payment bond, each with a surety company qualified to do business under the laws of the Commonwealth and satisfactory to the **City** and each in the sum of the Contract Sum, the premiums for which are to be paid by the **Contractor** and are included in the Contract

Sum. The bonds shall remain in effect until final payment is made. The sum of the performance bond shall increase each time the Contract Sum is increased as a result of a Change Order.

7.3. Submission to the City.

7.3.1. The **Contractor** must submit the performance bond and labor and materials or payment bond to the **City** upon the **Contractor's** execution of the Agreement.

ARTICLE 8 INSURANCE REQUIREMENTS

8.1. Worker's Compensation.

8.1.1. (*Reference:* M.G.L. c.149 §34A). Before commencing performance of the Contract, the **Contractor** shall provide by insurance for the payment of compensation and the furnishing of other benefits under M.G.L. c. 152 to all persons to be employed under the Contract, and the **Contractor** shall continue such insurance in full force and effect during the term of the Contract. Sufficient proof of compliance with this paragraph must be furnished at the time of execution of this Contract.

8.2 Additional Insured.

8.2.1. Each policy excluding only the Worker's Compensation and Owners Protective Liability must list the **City** as an additional insured.

8.3. Insurance Rating.

8.3.1. Any insurance carrier utilized to fulfill the insurance requirements of this Contract shall have a minimum A.M. Best rating of A-X.

8.4. Premiums.

8.4.1. The **Contractor** must provide the required insurance at its own expense. Failure to provide and continue in force shall be deemed a material breach of the Contract and shall operate as an immediate termination thereof. No cancellation of such insurance, whether by the insurer or by the insured, shall be valid unless written notice thereof is given by the party proposing cancellation to the other party and to the **City** at least fifteen (15) days prior to the intended effective date thereof, which date shall be expressed in said notice.

8.5. Notice of Occurrence.

8.5.1. Notice of occurrence shall be given to the **City** Manager, **City** of Cambridge, **City** Hall, 795 Massachusetts Avenue, Cambridge, MA 02139 and, at the option of the **Contractor**, any other **City** official permitted by law to receive notice.

8.6. Waiver of Subrogation.

8.6.1. The **Contractor** and all Subcontractors waive subrogation rights against the **City** for all losses.

8.7. Coverage Period.

8.7.1. Each insurance policy must cover the entire contract period and beyond as specified in the following sections.

File No. 5175 – Bicycle Parking Racks Installation

8.8. Policies and Limits.

8.8.1. The insurance required shall include all major division of coverage and shall be on a [comprehensive] commercial general form basis including Premise and Operations (including X-C-U), bodily injury(including death);broad form property damage (including completed operations) including injury to, or destruction of tangible property, including loss of use therefrom; personal injury; Owner's Protective (as a separate policy), Products and Completed Operations, and Owned, Non-owned, Leased, and Hired Motor Vehicles. Such insurance shall be written for not less than any limits of liability required by law or the following limits, whichever are greater:

Owner's Protective Liability **(as a separate policy)**	
Each Occurrence	$1 Million
Aggregate	$2 Million
Commercial Liability	
General Aggregate - per project	$2 Million
Products Completed Operations Aggregate – per project	$1 Million
Personal Injury and Advertising Limit	$1 Million
Each Occurrence	$1 Million

This policy shall include contractual liability coverage insuring the contractor's indemnity obligations under this Contract. The contractual and completed operations coverage shall be maintained on the City's and Indemnitees' behalf for a period of two (2) years after final completion and acceptance by City. If the Work includes work to be performed within 50 feet of a railroad, any exclusion for liability assumed under contract for work within 50 feet of a railroad shall be deleted.
This policy shall include City and any other party at interest requested by City as an additional insured with endorsements equivalent to ISO CG 20 10 for ongoing operations and to ISO CG 20 37 for completed operations. This policy shall be primary and non-contributory with respect to any other insurance available to an additional insured. The policy shall include endorsement equivalent to ISO CG 24 04, a Waiver of Subrogation in favor of City. The policy shall include endorsement CG 24 10, Coverage for injury to leased workers.

Railroad Protective Liability **(if required by an abutter, permittee or other)**

Each Occurrence	$2 Million
Aggregate	$6 Million

Automotive-for all owned, non-owned, hired and leased vehicles

Combined single limit	$1 Million
or	
Bodily injury- each person	$100,000
each accident	$1 Million
Property damage-each occurrence	$1 Million

If hauling contaminants and/or pollutants, the policy shall include a CA 99 48 Broadened Pollution Endorsement. must adhere to Sections 29 and 30 of the Motor Carrier Act of 1980, which shall contain coverage Form MCS-90.The policy shall name City as an additional insured. The policy shall contain a Waiver of Subrogation in favor of City.

Builder's Risk/Installation Floater (Value of the Contract)

The **Contractor** shall be required to purchase, maintain and furnish evidence satisfactory to the **City** property insurance generally described as Builders' Risk Insurance with an "all risk" type installation

floater covering loss by fire and standard extended coverage in the completed value form in the amount of the total value of structures, materials, and equipment to be built and installed under the Contract on a replacement cost basis.

This provision, with respect to Builders' Risk Insurance, shall in no way relieve the **Contractor** of his obligation of completing the Work covered by the Contract.

Contractor Pollution Liability		
Combined single limit- per occurrence		$1 Million
Annual aggregate		$3 Million

The **Contractor** shall purchase and maintain coverage for bodily injury and property damage resulting from liability arising out of pollution related exposures such as mold, fungi, or bacteria abatement, asbestos abatement, lead paint abatement, tank removal, removal of contaminated soil, etc. The insurance policy shall cover the liability of the Contractor during the processes of identification, removal, storage, transport and disposal of hazardous waste, lead, contaminated soil and/or asbestos abatement. The policy shall include coverage for on-Site and off-Site bodily injury and loss of, damage to, or loss of use of property, directly or indirectly arising out of the discharge, dispersal, release or escape of smoke, vapors, soot, fumes, acids, alkalis, toxic chemicals, liquids or gas, waste materials or other irritants, contaminants or pollutants into or upon the land, the atmosphere or any water course or body of water, whether it be gradual or sudden and accidental. The policy shall also include defense and clean-up costs. The City shall be named as an additional insured and coverage must be on an occurrence basis.

Excess Umbrella Liability	
Combined single limit	$15 Million
General aggregate	$15 Million

Worker's Compensation		
Coverage A	Statutory	
Coverage B	Each Accident	$100,000
	Disease-Policy limit	$500,000
	Disease-Each Employee	$100,000

8.9. Excess Umbrella Liability Insurance.

8.9.1. The **Contractor** may purchase and maintain excess liability insurance in the umbrella form in order to satisfy the limits of liability required for the insurance to be purchased and maintained in accordance with the requirements set forth above. Any such amounts must be in addition to the umbrella limits required, must list all underlying policies, and must list the **City** as an additional insured. Evidence of such excess liability shall be delivered to the **City** in the same form and manner as the required insurance policies.

8.10. Amendment of Requirements.

8.10.1. The **City** reserves the right, at its sole discretion, to amend the insurance requirements contained herein.

8.11. Occurrence Basis.

8.11.1. All insurance shall be written on an occurrence basis, unless the **City** approves in writing coverage on a claims-made basis. Coverages whether written on an occurrence or a claims-made basis shall be maintained without interruption from the date of commencement of the Work until the date of final

payment and termination of any coverage required to be maintained after final payment.

8.12. Certificates of Insurance.

8.12.1. Certificates of Insurance acceptable to the **City** and confirming the insurance coverage required herein are attached to the Contract. The **City** shall have no obligation to execute the Contract and may award the Contract to the next lowest responsible and responsive bidder, if such insurance certificates have not been provided to the **City** within five (5) business days after presentation of the Contract to the **Contractor** for execution. If requested by the City the **Contractor** will provide complete certified copies of every insurance policy before commencing and during performance of the Contract.

8.13. Endorsements.

8.13.1. The **Contractor** shall furnish to the **City** copies of any endorsements that are subsequently issued amending limits of coverage.

8.14. Property Insurance.

8.14.1. The **City** does intend to purchase property insurance covering the Project or the Work. The **Contractor** shall not be required to provide such insurance, and the **Contractor** may, if it so desires procure property insurance which will protect the interests of the **Contractor**, Subcontractor and Sub-subcontractors in the Work. The **Contractor** understands that such property insurance is solely the **City's** responsibility, and the **Contractor**, its Subcontractors and Sub-subcontractors shall have no claim against the **City** on account of the **City's** failure to provide such property insurance. The **Contractor** shall promptly replace all damaged Work in which it or its Subcontractors and Sub-subcontractors have an insurable interest, and all Work which is stolen, vandalized, or damaged due to the **Contractor's** failure to protect the site as required by Article 5, at no additional cost to the **City**, whether or not the **Contractor** procures property insurance with respect to such Work as hereinabove provided.

ARTICLE 9 TESTS AND INSPECTIONS

9.1. Access.

9.1.1. The **City**, the **Engineer**, and all other persons designated by the **City** shall have access to the Work at reasonable times for observing, inspecting, and testing. The **Contractor** shall provide them with proper and safe conditions for such access and advise them of the **Contractor's** site safety procedures and programs so that they may comply therewith as applicable.

9.2. Tests and Inspections.

9.2.1. The **Contractor** shall give the **Engineer** timely notice of readiness of the Work for all required inspections, tests, or approvals and shall cooperate with inspection and testing personnel to facilitate required inspections or tests.

9.2.2. Unless otherwise provided, the **Contractor** shall make arrangements for such tests, inspections, and approvals with an independent testing laboratory or entity acceptable to the **City**, or with the appropriate public authority and shall bear all related costs of tests, inspections, and approvals. If the laws or regulations of any public body having jurisdiction require any Work or part thereof specifically to be inspected, tested, or approved by an employee or other representative of such public body, the **Contractor** shall assume full responsibility for arranging and obtaining such inspections, tests, or approvals, pay all costs in connection therewith and furnish the **Engineer** with the required certificates of inspection, testing, or approval.

9.2.3. The **Contractor** shall be responsible for arranging and obtaining and shall pay all costs in connection with any inspections, tests, or approvals required for the **Engineer's** acceptance of materials or equipment to be incorporated into the Work, or of materials, mix designs, or equipment submitted for

approval prior to the **Contractor's** purchase thereof for incorporation into the Work.

9.2.4. If any Work that is to be inspected, tested, or approved is covered by the **Contractor**, Subcontractor, or Sub-subcontractor without the prior written consent of the **Engineer**, it must be uncovered for observation, inspection, testing, or approval, if requested by the **Engineer**. The **Contractor** must recover the Work at its own expense.

9.2.5. The **Contractor** shall not be relieved of obligations to perform the Work in accordance with the Contract Documents either by activities or duties of the **Engineer** in the **Engineer's** administration of the Contract or by tests, inspections, or approvals required or performed by persons other than the **Contractor**.

ARTICLE 10 UNCOVERING AND CORRECTING WORK

10.1. Uncovering Work.

10.1.1. If a portion of the Work is covered contrary to the **Engineer's** request or to requirements specifically expressed in the Contract Documents, it must, if required in writing by the **Engineer**, be uncovered for the **Engineer's** observation and be replaced, both at the **Contractor's** expense and without change in the Contract Time.

10.1.2. If a portion of the Work has been covered which the **Engineer** has not specifically requested to observe prior to its being covered, the **Engineer** may request to see such Work, and it shall be uncovered by the **Contractor**. If it is found that such Work is in accordance with the Contract Documents, costs of uncovering and replacing shall, by appropriate Change Order, be charged to the **City**. If it is found that such Work is defective or not in accordance with the Contract Documents, the **Contractor** shall pay all claims, costs, losses, and damages caused by, arising out of or resulting from such uncovering, exposure, observation, inspection, and testing and of satisfactory replacement or reconstruction (including, but not limited to, all costs of repair or replacement of work of others); and the **City** shall be entitled to an appropriate decrease in the Contract Sum. The **City** may take such decrease by reducing the then current application for payment accordingly or subsequent applications, if necessary, until the decrease is paid in full.

10.2. Correcting Work.

10.2.1. The **Contractor** shall promptly correct Work rejected by the **Engineer** or failing to conform to the requirements of the Contract Documents, whether observed before or after Substantial Completion and whether or not fabricated, installed, or completed. The **Contractor** shall bear all costs of correcting such rejected Work including additional testing and inspections and compensation for the **Engineer's** services and expenses made necessary thereby and any cost, loss, or damages to the **City** resulting from such failure or defect.

10.2.2. If, within one (1) year after the date of Substantial Completion of the Work or designated portion thereof, or after the date for commencement of warranties established in Article 15, or by terms of an applicable special warranty required by the Contract Documents, any of the Work is found to be not in accordance with the requirements of the Contract Documents, the Contractor shall correct it promptly after receipt of written notice from the **City** to do so, unless the **City** has previously given the **Contractor** a written acceptance of such condition. This period of one (1) year shall be extended with respect to portions of Work first performed after Substantial Completion by the period of time between Substantial Completion and the actual performance of the Work. This obligation to correct under this paragraph shall survive acceptance of the Work under the Contract and termination of the Contract. The **City** shall give such notice promptly after discovery of the condition.

10.2.3. The **Contractor** shall correct, remove, or replace portions of the Work which are not in accordance with the requirements of the Contract Documents and are neither corrected by the **Contractor** nor accepted by the **City**.

10.2.4. If the **Contractor** fails within a reasonable time to correct nonconforming Work, or to remove and replace rejected Work, or fails to perform the Work in accordance with the Contract Documents, the **City** may correct it in accordance with the provisions herein. If the **Contractor** does not proceed with correction, removal, or replacement of such nonconforming Work within seven (7) days from the date of written notice from the **Engineer**, the **City** may correct it and store any salvable materials or equipment at the **Contractor's** expense. If the **Contractor** does not pay costs of any such removal and storage within ten (10) days after written notice, the **City** may upon ten (10) additional days' written notice sell such materials and equipment at auction or at private sale and shall account for the proceeds thereof, after deducting costs and damages that should have been borne by the **Contractor**, including compensation for the **Engineer's** services and expenses made necessary thereby. If such proceeds of sale do not cover all the costs which the **Contractor** should have borne, the Contract Sum shall be reduced by the deficiency. If payments then or thereafter due the **Contractor** are not sufficient to cover such amount, the **Contractor** shall pay the difference to the **City**.

10.2.5. The **Contractor** shall bear the cost of correcting destroyed or damaged construction, whether completed or partially completed, of the **City** or separate contractors caused by the **Contractor's** correction or removal of Work which is not in accordance with the requirements of the Contract Documents.

10.2.6. Nothing contained in this paragraph shall be construed to establish a period of limitation with respect to other obligations which the **Contractor** might have under the Contract Documents. Establishment of the time period of one (1) year as described in the above paragraph related only to the specific obligation of the **Contractor** to correct the Work and has no relationship to the time within which the obligation to comply with the Contract Documents may be sought to be enforced nor to the time within which proceedings may be commenced to establish the **Contractor's** liability with respect to the **Contractor's** obligations other than specifically to correct the Work.

10.3. Acceptance of Nonconforming Work.

10.3.1. If, instead of requiring correction or removal and replacement of defective or nonconforming Work, the **City** prefers to accept Work which is not in accordance with the requirements of the Contract Documents, the **City** may do so instead of requiring its removal and correction, in which case the **Contractor** shall pay all claims, costs, losses, and damages attributable to the **City's** evaluation of and determination to accept such defective or nonconforming Work. The Contract Sum will be reduced as appropriate. Such adjustment shall be effected whether or not final payment has been made.

ARTICLE 11 CHANGES IN THE WORK

11.1. In General.

11.1.1. The Contract Sum constitutes the total compensation (subject to authorized adjustments) payable to the **Contractor** for performing the Work. All duties, responsibilities and obligations assigned to or undertaken by the **Contractor** shall be at the **Contractor's** expense without any change in the Contract Sum.

11.1.2. Without invalidating the Contract and without notice to any surety, the **City** may, at any time or from time to time, order additions to, deletions from, or revisions in the Work. Such additions, deletions, or revisions will be authorized by a Change Order, a Modification or a Work Change Directive. Upon receipt of any such document, the **Contractor** shall promptly proceed with the Work involved which will be performed under the applicable conditions of the Contract Documents (except as otherwise specifically provided).

11.1.3. The **Contractor** shall not be entitled to an increase in the Contract Sum or an extension of the Contract Time with respect to any Work performed that is not required by the Contract Documents as amended, modified, or supplemented, except as otherwise provided herein.

11.2. Change Orders.

11.2.1. (*Reference:* M.G.L. c. 30, §39I). The **Contractor** shall perform all the Work required by this Contract in conformity with the Drawings and Specifications contained herein. No willful and substantial deviation from said Drawings and Specifications shall be made unless authorized in writing by the **Engineer** and the **City** in charge of the Work who is duly authorized by the **City** to approve such deviations. In order to avoid delays in the prosecution of the Work required by such Contract, such deviation from the Drawings or Specifications may be authorized by a written order of the **City** or the **Engineer** so authorized to approve such deviation. Within thirty (30) days thereafter, such written order shall be confirmed by a certificate of the **City** stating: (1) If such deviation involves any substitution or elimination of materials, fixtures or equipment, the reasons why such materials, fixtures, or equipment were included in the first instance and the reasons for substitution or elimination, and, if the deviation is of any other nature, the reasons for such deviation, giving justification therefor; (2) that the specified deviation does not materially injure the Project as a whole; (3) that either the work substituted for the Work specified is of the same cost and quality, or that an equitable adjustment has been agreed upon between the **City** and the **Contractor** and the amount in dollars of said adjustment; and (4) that the deviation is in the best interest of the **City**.

11.3. Work Change Directive.

11.3.1. A Work Change Directive shall be used in the absence of total agreement on the terms of a Change Order.

11.3.2. Upon request of the **City** or the **Engineer**, the **Contractor** shall without cost to the **City** submit to the **Engineer** in such form as the **Engineer** may require, an accurate written estimate of the cost of any proposed extra work or change. The estimate shall indicate the quantity and unit cost of each item of materials, and the number of hours of work and hourly rate for each class of labor, as well as the description and amounts of all other costs chargeable under the terms of this Article. Unit labor costs for the installation of each item of materials shall be shown if required by the **Engineer**. If required by the **Engineer**, in order to establish the exact cost of new Work added or of previously required Work omitted, the **Contractor** shall obtain and furnish to the **Engineer** bona fide proposals from recognized Suppliers for furnishing any material included in such Work. Such estimates shall be furnished promptly so as to occasion no delay in the Work, and shall be furnished at the **Contractor's** expense.

11.3.3. The **Contractor** shall state in the estimate any extension of time required for the completion of the Work if the change or extra Work is ordered. The **Contractor** shall document, through a critical path analysis, or some other clearly delineated explanation, how the proposed change affects other aspects of the Work, and why it would require an extension of time. The **Contractor** shall promptly revise and resubmit such estimate if the **Engineer** determines that it is not in compliance with the requirements of this Article, or that it contains errors of fact or mathematical errors.

11.3.4. If the Work Change Directive provides for an adjustment to the Contract Sum, the adjustment shall be based on one of the following methods, as selected by the **City**, selection of which does not require the consent of the **Contractor**:

11.3.4.1. By unit prices stated in the Contract Documents or otherwise mutually agreed upon.

11.3.4.2. By Cost and Percentages estimated by the **Contractor** as provided herein and accepted by the **City**; the **Contractor's** estimate shall become a fixed price which shall not be changed by any variation in the actual cost of executing the Work covered by the change.

11.3.4.3. By actual Cost determined after the Work covered by the change is completed, plus Percentage.

11.3.4.4. By submission to arbitration or a court, which shall determine the fair value of the Work covered by the change.

11.3.5. As used in this paragraph, "Cost" shall mean the estimated or actual net increase or decrease in cost to the **Contractor**, Subcontractor, or Sub-subcontractor for performing the Work covered by the change, including actual payments for materials, equipment rentals, expendable items, wages, and associated benefits to the workers and to supervisors employed full time at the Site, insurance, bonds, and other provable direct costs, but not including any administrative, accounting or expediting costs, or other indirect or overhead costs, or any wages or benefits of supervisory personnel not assigned full time to the Site, or any amount for profit or fee to the **Contractor**, Subcontractor, or Sub-subcontractor.

11.3.6. "Percentage" shall mean an allowance to be added to or subtracted from the Cost in lieu of overhead and profit and of any other expense which is not included in the Cost of the Work covered by the change, as defined above. Percentage for a Sub-subcontractor shall be 8% of any net increase or decrease of Cost of any Work performed by the Sub-subcontractor's own forces plus 4% of any net increase or decrease in Cost of any Work performed for the Sub-subcontractor by lower tier Sub-subcontractors. Percentage for a Subcontractor shall be 12% of any net increase or decrease of Cost of any Work performed by the Subcontractor's own forces plus 4% of the Cost of Work performed by Sub-subcontractors. Percentage for the **Contractor** shall be 15% of any net increase or decrease of Cost of any Work performed by the **Contractor's** own forces plus 5% of any net increase or decrease in the Cost for all other Work covered by the change. When the **Contractor** is also performing Work as a Subcontractor or Sub-subcontractor, the **Contractor** shall only be entitled to a total of no more than 15% of any net increase or decrease of Cost of any Work.

11.3.7. When in the reasonable judgment of the **Engineer** a series of Work Change Directives or Change Orders effect a single change, Percentage shall be calculated on the cumulative net increase or decrease in Cost, if any.

11.3.8. If unit prices are stated in the Contract Documents or are subsequently agreed upon, and if quantities originally contemplated are so changed in a Proposed Change Order or Work Change Directive that the application of such unit prices to quantities of Work proposed will cause substantial inequity to the **City** or the **Contractor**, the applicable unit prices shall be equitably adjusted.

11.3.9. If the **City** elects to determine the Cost of the Work as provided in paragraph 11.3.4.1 using unit prices stated in the Contract Documents or subsequently agreed upon, the unit prices shall be subject to the prior paragraph. Notwithstanding the inclusion of unit prices in the Contract Documents, it shall be the **City's** option to require the Cost of any given change to be determined by one of the other methods stated in 11.3.4. If the **City** elected to determine the Cost of the change by unit prices and the nature of the work is such that its extent cannot readily be measured after the completion of such work or any subsequent Work, the **Contractor** shall keep daily records, available at all times to the **Engineer** for inspection, of the actual quantities of such Work put in place, and delivery receipts or other adequate evidence, acceptable to the **Engineer**, indicating the quantities of materials delivered to the Site for use in such unit price Work, and distinguishing such from other similar material delivered for use in Work included in the base Contract Sum. If so required by the **Engineer**, materials for use in unit price Work shall be stored apart from all other materials on the Project.

11.3.10. If the **City** elects to determine the Cost of the Work as provided in methods 11.3.4.3. or 11.3.4.4. or if the method of determining the Cost has not been established before the Work is begun, the **Contractor** shall keep detailed daily records of labor and material costs applicable to the Work.

11.3.11. Upon receipt of a Work Change Directive, the **Contractor** shall promptly proceed with the change in the Work involved and advise the **Engineer** in writing of the **Contractor's** agreement or disagreement with the method, if any, provided in the Work Change Directive for determining the proposed adjustment in the Contract Time.

11.3.12. A Work Change Directive signed by the **Contractor** indicates the agreement of the

Contractor therewith, including adjustment in the Contract Sum and Contract Time or the method for determining them. Such agreement shall be effective immediately and shall be recorded as a Change Order.

11.3.13. If the **Engineer** and the **Contractor** do not agree with the adjustment in the Contract Time or the method for determining it, the adjustment or the method shall be referred to the **Engineer** for determination.

11.4. Minor Changes in the Work.

11.4.1. The **Engineer** has the authority to order minor changes in the Work. "Minor changes" as used in this paragraph mean changes which are so insignificant as to not affect the Contract Sum or the Contract Time and which are not inconsistent with the intent of the Contract Documents. Any minor change shall be committed to a written order which shall be binding on both the **City** and the **Contractor** and which shall be promptly carried out by the **Contractor**.

11.5. Certificate of Appropriations.

11.5.1. (*Reference:* M.G.L. c. 44, §31C). This Contract shall not be deemed to have been made until the **City's** auditor has certified thereon that an appropriation in the amount of this Contract is available therefor and that an officer or agent of the **City** has been authorized to execute said Contract and approve all requisitions and change orders. No order to the **Contractor** for a change in or addition to the Work, whether in the form of a drawing, plan, detail or any other written instruction, unless it is an order which the **Contractor** is willing to perform without any increase to the Contract price, shall be deemed to be given until the auditor has certified thereon that an appropriation in the amount of such order is available therefore; but such certificate shall not be construed as an admission by the **City** of its liability to pay for such work. The certificate of the auditor that an appropriation in the amount of this Contract or in the amount of such order is available shall bar any defense by the **City** on the grounds of insufficient appropriation.

ARTICLE 12 CHANGE IN THE CONTRACT TIME

12.1. Date of Commencement.

12.1.1. The date of commencement of the Work is the dated established in the Notice to Proceed. The date shall not be postponed by the failure to act of the **Contractor** or persons or entities for whom the **Contractor** is responsible.

12.2. Progress and Completion.

12.2.1. Time is of the essence; all time limits stated in the Contract Documents are of the essence of the Contract. By executing the Agreement, the **Contractor** confirms that the Contract Time is a reasonable period for performing the Work.

12.2.2. The **Contractor** shall proceed expeditiously with adequate forces and shall achieve Substantial Completion within the Contract Time.

12.2.3. At least ten (10) working days before the first application for payment, the **Contractor** shall submit to the **Engineer** a progress schedule showing for each class of Work included in the schedule of values, the percentage of completion to be obtained and the total dollar value of Work to be completed as of the first of each month until Substantial Completion. All calculations shall be on the basis of Work in place, but may include, at the **Engineer's** discretion, the value of materials delivered but not in place.

12.2.4. The progress schedule shall be based on an orderly progression of the Work, allowing adequate time for each operation (including adequate time for submission and review of submittals), and

leading to a reasonable certainty of Substantial Completion by the date established in the Agreement. The progress schedule will be reviewed by the **Engineer** for compliance with the requirements of this Article and will be accepted by the **Engineer** or returned to the **Contractor** for revision and resubmittal. Unless specifically required by law, no payment under this Contract shall be due until the progress schedule has been approved by the **Engineer**. The **Engineer's** review of the progress schedule shall not impose any duty on the **Engineer** or the **City** with respect to the timing, planning, scheduling, or execution of the Work. In particular, if the **Contractor** proposes a progress schedule indicating a date of Substantial Completion which is earlier than the Contract Time, the **Contractor** shall not be entitled to additional payment or compensation of any kind if, for any reason, the full Contract Time is required to achieve Substantial Completion of the Work.

12.2.5. If in any Application for Payment, the total value of the completed Work in place, as certified by the **Engineer**, is less than 90% of the total value of the Work in place estimated in the progress schedule, the **City** may, at the **City's** option, require the **Contractor** to accelerate the progress of the Work without cost to the **City** by increasing the workforce or hours of Work or by other reasonable means approved by the **Engineer**.

12.2.6. If each of three successive applications, as certified by the **Engineer**, indicate that the actual Work completed is less than 90% of the values estimated in the progress schedule to be completed by the respective dates, the **City** may at the **City's** option, treat the **Contractor's** delinquency as a default justifying the action permitted under Article 18.

12.2.7. If the **Engineer** has determined that the **Contractor** should be permitted to extend the time for completion as provided below, the calendar dates in the progress schedule shall be adjusted accordingly to retain their same relationship to the adjusted date of Substantial Completion, and the dollar value of the Work to be completed as of the first of each month shall be adjusted pro rata.

12.2.8. If the **Contractor** fails to submit any application for payment in any month, the **Engineer** shall, for the purpose of this evaluation of progress, certify separately to the actual value of the Work in place completed as of the first of the month to the best of the **Engineer's** knowledge.

12.2.9. Nothing herein shall limit the **City's** right to liquidated or other damages for delays by the **Contractor** or to any other remedy which the **City** may be entitled or may possess under other provisions of the Contract Documents or by law.

12.3. Delays and Extensions of Time.

12.3.1. If the **Contractor** is delayed at any time in the progress of the Work by an act or neglect of the **City** or the **Engineer**, or of an employee of either, or of a separate contractor employed by the **City**, or by changes ordered in the Work, or by labor disputes, fire, unusual delay in deliveries, unavoidable casualties, or other causes (except weather) beyond the **Contractor's** control, or by delay authorized by the **City**, or by other causes which the **Engineer** determines may justify delay, then the Contract Time shall be extended by Change Order or Work Change Directive for such reasonable time as the **Engineer** may determine.

12.3.2. Claims relating to time shall be made in accordance with applicable provisions of Article 16.

12.3.3. No claim for extension of time shall be allowed on account of failure of the **Engineer** to furnish Drawings, Specifications or instructions or to return Shop Drawings or Samples until fifteen (15) days after receipt by the **Engineer** by registered or certified mail of written demand for such instructions, Drawings, Specifications, or Samples, and then not unless such claim is reasonable.

12.3.4. No extensions of time shall be granted because of seasonal or abnormal variations in temperature, humidity or precipitation, which conditions shall be wholly at the risk of the **Contractor**, whether occurring within the time originally scheduled for completion or within the period of any extension

granted. There shall be no increase in the Contract Sum on account of any additional costs of operations or conditions resulting therefrom.

12.3.5. The **Contractor** hereby agrees that the **Contractor** shall have no claim for damages of any kind against the **City** or the **Engineer** on account of any delay in the commencement of the Work and/or any hindrance, delay, or suspension of any portion of the Work, whether such delay is caused by the **City**, the **Engineer**, or otherwise, except as and to the extent expressly provided under M.G.L. c. 30, §39O, in the case of written orders by the **City**. The **Contractor** acknowledges that the **Contractor's** sole remedy for any such delay and/or suspension will be an extension of time as provided in this Article.

12.3.6. (*Reference:* M.G.L. c. 30, §39O). (a) The **City** may order the **Contractor** in writing to suspend, delay, or interrupt all or any part of the Work for such period of time as it may determine to be appropriate for the convenience of the **City**, provided however that if there is a suspension, delay, or interruption for fifteen (15) days or more due to a failure of the **City** to act within the time specified in this Contract, the **City** shall make an adjustment in the Contract prices for any increase in the cost of performance of this Contract but shall not include any profit to the Contractor on such increase; and provided further, that the City shall not make adjustment in the Contract Price under this provision for any suspension, delay, interruption, or failure to act to the extent that such is due to any cause for which this Contract provides for an equitable adjustment of the Contract price under any other Contract provisions.

(b) The **Contractor** must submit the amount of a claim under provision (a) to the **City** in writing as soon as practicable after the end of the suspension, delay, interruption, or failure to act and, in any event, not later than the date of final payment under this Contract and, except for costs due to a suspension order, the **City** shall not approve any costs in the claim incurred more than twenty (20) days before the **Contractor** notified the **City** in writing of the act or a failure to act involved in the Claim.

In the event a suspension, delay, interruption, or failure to act of the **City** increases the cost of performance to any Subcontractor, that Subcontractor shall have the same rights against the **Contractor** for payment for an increase in the cost of its performance as provisions (a) and (b) give the **Contractor** against the **City**, but nothing in provisions (a) and (b) shall in any way change, modify, or alter any other rights which the **Contractor** or the Subcontractor may have against each other.

12.4. Liquidated Damages.

12.4.1. If the **Contractor** shall fail to achieve Substantial Completion or Final Completion within the Contract Times, it shall be liable to pay the **City** the daily amount specified in the Agreement, not as a penalty, but as a fixed and agreed upon damages for breach of contract. The said amount is fixed and agreed upon because of the difficulty of ascertaining the **City's** actual damages. It is mutually understood that the said amount is a reasonable approximation or estimate thereof as of the date of the Agreement. The **City** may elect to withhold said amount from periodic or final payments due to the **Contractor**, in addition to retainage and other backcharges.

12.5. Changes in the Contract Time.

12.5.1. How. The Contract Time may only be changed by a Change Order or a Modification. Any claim for an adjustment of the Contract Time shall be based on a written notice delivered to the party making the claim to the other party and to the **Engineer** promptly (but in no event later that seven (7) days) after the occurrence of the event giving rise to the claim and stating the general nature of the claim. Notice of the extent of the claim with supporting data shall be delivered within thirty (30) days after such occurrence and shall be accompanied by the claimant's written statement that the adjustment claimed is the entire adjustment to which the claimant has reason to believe it is entitled as a result of the occurrence of said event. All claims for adjustment in the Contract Time shall be determined by the **Engineer** in accordance with Article 16. No claim for an adjustment in the Contract Time will be valid if not submitted in accordance with the requirements of this paragraph.

12.5.2. Early Completion. The Contract Time shall not be changed due to a delay in the **Contractor's** early completion date.

ARTICLE 13 PAYMENTS

13.1. Schedule of Values.

13.1.1. The **Contractor** sha ll submit to the **Engineer** a schedule of values as specified in paragraph 5.16 which shall subdivide the Work into its component parts and shall include quantities, direct craft labor worker hours, labor cost and material/equipment cost. Labor cost shall include an appropriate amount of construction equipment costs, supplemental costs, administrative expenses, contingencies, and profit. The **Contractor** shall prepare the schedule of values in such form and supported by such data to substantiate its accuracy as the **Engineer** may require and shall be revised if later found by the **Engineer** to be inaccurate. This schedule, unless objected to by the **Engineer**, shall be used as a basis for reviewing the **Contractor's** applications for payment.

13.2. Content and Submission of Applications for Payment.

13.2.1. At least ten (10) days before the date established for each progress payment, the **Contractor** shall submit to the **Engineer** six (6) copies of an itemized application for payment for Work completed in accordance with the schedule of values. Such application shall be in a form or format established or approved by the **Engineer** and shall be supported by documentation substantiating the **Contractor's** right to payment.

13.2.2. When Work Change Directives have set forth an adjustment to the Contract Sum but have not yet been included in Change Orders, the value established by the **City** may be included in the application.

13.2.3. Applications covering Work of Subcontractors or Suppliers shall not include requests for payments of amounts the **Contractor** does not intend to pay to a Subcontractor or Supplier because of a dispute or other reason. The **Contractor** shall not be paid for any Work performed by a Subcontractor unless and until the **City** receives for that Subcontractor a certificate of insurance which conforms to the requirements of the Contract Documents .

13.2.4. Unless otherwise provided in the Contract Documents, payments shall be made on account of materials and equipment delivered and suitably stored at the Site for subsequent incorporation in the Work. If approved in advance by the **City**, payment may similarly be made for materials and equipment suitably stored off the Site at a location agreed upon in writing. Payment for materials and equipment stored on or off the Site shall be conditioned upon the application for payment being accompanied by a bill of sale, an invoice, or other documentation warranting that the **City** has received the materials and equipment free and clear of all liens, claims, security interests, or encumbrances, hereinafter collectively referred to as "liens," and evidence that the materials and equipment are covered by appropriate insurance and other arrangements to protect the **City's** interest therein.

13.2.5. Each application for payment or periodic estimate requesting payment shall be accompanied by, at the **City's** option, a certificate from each Subcontractor stating that the Subcontractor has been paid all amounts due the Subcontractor on the basis of the previous periodic payment to the **Contractor**, or else stating the amount not so paid and the reason for the discrepancy. In the event of any such discrepancy, the **Contractor** shall furnish the **Contractor's** own written explanation to the **City** through the **Engineer**. Such waiver or certificate shall be in a form acceptable to the **City**.

13.2.6. Within fifteen days after receipt from the **Contractor**, at the place designated by the awarding authority if such a place is so designated, of a periodic estimate requesting payment of the amount due for the preceding month, the awarding authority will make a periodic payment to the **Contractor** for the work performed during the preceding month and for the materials not incorporated in

the work but delivered and suitably stored at the site (or at some location agreed upon in writing) to which the **Contractor** has title or to which a subcontractor has title and has authorized the **Contractor** to transfer title to the awarding authority, less (1) a retention based on its estimate of the fair value of its claims against the **Contractor** and less (2) a retention for direct payments to subcontractors based on demands for same in accordance with the provisions of section thirty-nine F, and less (3) a retention not exceeding five per cent of the approved amount of the periodic payment. After the receipt of a periodic estimate requesting final payment and within sixty-five days after (a) the **Contractor** fully completes the work or substantially completes the work so that the value of the work remaining to be done is, in the estimate of the awarding authority, less than one per cent of the original contract price, or (b) the Contractor substantially completes the work and the awarding authority takes possession for occupancy, whichever occurs first, the awarding authority shall pay the Contractor the entire balance due on the contract less (1) a retention based on its estimate of the fair value of its claims against the Contractor and of the cost of completing the incomplete and unsatisfactory items of work and less (2) a retention for direct payments to subcontractors based on demands for same in accordance with the provisions of section thirty-nine F, or based on the record of payments by the **Contractor** to the subcontractors under this contract if such record of payment indicates that the **Contractor** has not paid subcontractors as provided in section thirty-nine F. If the awarding authority fails to make payment as herein provided, there shall be added to each such payment daily interest at the rate of three percentage points above the rediscount rate than charged by the Federal Reserve Bank of Boston commencing on the first day after said payment is due and continuing until the payment is delivered or mailed to the **Contractor**; provided, that no interest shall be due, in any event, on the amount due on a periodic estimate for final payment until fifteen days (twenty-four days in the case of the commonwealth) after receipt of such a periodic estimate from the **Contractor**, at the place designated by the awarding authority if such a place is so designated. The **Contractor** agrees to pay to each subcontractor a portion of any such interest paid in accordance with the amount due each subcontractor.

The awarding authority may make changes in any periodic estimate submitted by the **Contractor** and the payment due on said periodic estimate shall be computed in accordance with the changes so made, but such changes or any requirement for a corrected periodic estimate shall not affect the due date for the periodic payment or the date for the commencement of interest charges on the amount of the periodic payment computed in accordance with the changes made, as provided herein; provided, that the awarding authority may, within seven days after receipt, return to the **Contractor** for correction, any periodic estimate which is not in the required form or which contains computations not arithmetically correct and, in that event, the date of receipt of such periodic estimate shall be the date of receipt of the corrected periodic estimate in proper form and with arithmetically correct computations. The date of receipt of a periodic estimate received on a Saturday shall be the first working day thereafter. The provisions of section thirty-nine G shall not apply to any contract for the construction, reconstruction, alteration, remodeling, repair or demolition of any public building to which this section applies. All periodic estimates shall be submitted to the awarding authority, or to its designee as set forth in writing to the Contractor, and the date of receipt by the awarding authority or its designee shall be marked on the estimate. All periodic estimates shall contain a separate item for each filed subtrade and each sub-subtrade listed in sub-bid form as required by specifications and a column listing the amount paid to each subcontractor and sub-subcontractor as of the date the periodic estimate is filed. The person making payment for the awarding authority shall add the daily interest provided for herein to each payment for each day beyond the due date based on the date of receipt marked on the estimate.

A certificate of the architect to the effect that the Contractor has fully or substantially completed the work shall, subject to the provisions of section thirty-nine J, be conclusive for the purposes of this section. (*Reference*: M.G.L. c. 30, §39K.)

13.3. False Applications for Payment.

13.3.1. (*Reference:* M.G.L. c. 93, §9B). Any person who shall make or cause to be made, or present or cause to be presented, for payment or approval, to or by any employee, department, or agency, any claim upon or against any department or agency, knowing such claim to be false, fictitious or fraudulent, or who, for the purpose of obtaining or aiding to obtain the payment or approval of such claim,

makes, uses, or causes to be made or used, any false bill, receipt, voucher, toll, account, claim, certificate, affidavit, or deposition knowing the same to contain any fraudulent or fictitious statement or entry, shall forfeit and pay to the **City** the sum of two thousand dollars ($2,000.00) and, in addition, double the amount of damages which the **City** may have sustained by reason of the doing or committing of such act, together with the costs of the action.

13.4. Review of Applications for Payment.

13.4.1. The **Engineer** shall review each application for payment and will reject any application that (1) is not accompanied by the required documentation or (2) contains errors, mathematical or otherwise.

13.4.2. Within five (5) business days after receipt of an application for payment, the **Engineer** will either (1) return the application to the **Contractor** with a written explanation as to why it was rejected or (2) issue to the **City** a certificate for payment, with a copy to the **Contractor**, for such amount as the **Engineer** determines is properly due. In the event an application is returned to the **Contractor**, the date of receipt of the application shall be the date of receipt of the corrected application.

13.4.3. The **Engineer** or the **City** may make changes to any application submitted by the **Contractor**.

13.4.4. By recommending any payment, the **Engineer** will not thereby be deemed to have represented that: (1) exhaustive or continuous on-site inspections have been made to check the quality or the quantity of the Work beyond the responsibilities specifically assigned to the **Engineer** in the Contract Documents or (2) that there may not be other matters or issues between the parties that might entitle the **Contractor** to be paid additionally by the **City** or entitle the **City** to withhold payment to the **Contractor**. The **Engineer's** approval of the application for payment and the accompanying documentation shall indicate that to the best of the **Engineer's** knowledge, information, and belief, the Work has progressed to the point indicated by the **Contractor**, and that the quality of the Work is in accordance with the Contract Documents, subject to an evaluation of the Work as a functioning whole prior to or upon Substantial Completion, the results of any subsequent tests specified in the Contract Documents, final determination of quantities and classifications for unit price work and any other qualifications so stated.

13.4.5. The **Engineer's** recommendation of any payment shall not mean that the **Engineer** is responsible for the **Contractor's** means, methods, techniques, sequences, or procedures of construction, or the safety precautions and programs incident thereto, or for any failure of the **Contractor** to comply with laws and regulations applicable to the furnishing or performance of Work, of for any failure of the **Contractor** to perform or furnish Work in accordance with the Contract Documents.

13.4.6. No certificate given or payment made shall be evidence of the performance of this Contract, either wholly or in part and no payment, whether made upon the final certificate or otherwise, shall be construed as an acceptance of defective work or materials.

13.5. Decisions to Withhold Certification.

13.5.1. The **Engineer** may refuse to recommend the whole or any part of any payment if, in the **Engineer's** opinion, it would be incorrect to make the representations to the **City** referred to above.

13.5.2. If the **Contractor** and the **Engineer** cannot agree on a revised amount, the **Engineer** will promptly approve a certificate for payment for the amount for which the **Engineer** is able to make such representations to the **City**. The **Engineer** may also decide not to certify payment or, because of subsequently discovered evidence or subsequent observations, may nullify the whole or a part of a certificate for payment previously issued, to such extent as may be necessary in the **Engineer's** opinion to protect the **City** from loss because of:

13.5.2.1. defective Work not remedied;

13.5.2.2. third party claims filed or reasonable evidence indicating probable filing of such claims;

13.5.2.3. failure of the **Contractor** to make payments properly to Subcontractors or for labor, materials or equipment;

13.5.2.4. reasonable evidence that the Work cannot be completed for the unpaid balance of the Contract Sum;

13.5.2.5. damage to the **City** or another contractor;

13.5.2.6. reasonable evidence that the Work will not be completed within the Contract Time, and that retainage currently held by the **City** would not be adequate to cover actual or liquidated damage for the anticipated delay;

13.5.2.7. persistent failure to carry out the Work in accordance with the Contract Documents; or

13.5.2.8. failure the Contractor to comply with mandatory requirements for maintaining record drawings. The **Contractor** shall check record drawings each month. Written confirmation that the record drawings are current will be required by the **Engineer** before approval of the **Contractor's** monthly payment requisition.

13.5.3. When the above reasons for withholding certification are removed, certification will be made for amounts previously withheld.

13.6. Progress Payments.

13.6.1. After the **Engineer** has issued a certificate for payment, the **City** shall make payment in the manner and within the time provided in the Contract Documents.

13.6.2. (*Reference:* M.G.L. c. 30, §39G). The **City** shall pay the amount due pursuant to any periodic, Substantial Completion or final estimate within thirty-five (35) days after receipt of written acceptance for such estimate from the **Contractor**. In the case of periodic payments, the **City** may deduct from its payment a retention based on its estimate of the fair value of its claims against the **Contractor**, a retention for direct payments to Subcontractors based on demands for same in accordance with M.G.L. c. 30, §39F and a retention to secure satisfactory performance of the contractual work, not exceeding five percent (5%) of the approved amount of any periodic payment, and the same right to retention shall apply to bonded Subcontractors entitled to direct payment under M.G.L. c. 30, §39F provided, that a five percent (5%) value of all items that are planted in the ground shall be deducted from the periodic payments until final acceptance.

13.6.3. No periodic, Substantial Completion or final estimate or acceptance or payment thereof shall bar the **Contractor** from reserving all rights to dispute the quantity and amount of, or the failure of the **City** to approve a quantity and amount of, all or part of any Work item or extra Work item.

13.7. Final Payment.

13.7.1. After final inspection and after the **Contractor** has completed all the required corrections to the satisfaction of the **Engineer** and the **City** and delivered in accordance with the Contract Documents all maintenance and operating instructions, schedules, guarantees, bonds, certificates, or other evidence of insurance, certificates of inspection, marked-up record documents, and all other documents called for in the Contract Documents, as well as any surplus materials requested by the **City,** the **Contractor** may make an application for final payment as provided below.

13.7.2. (*Reference:* M.G.L. c. 30, §39G). Within thirty (30) days after receipt by the **City** of a notice from the **Contractor** stating that all of the Work required by the Contract has been completed, the **City** shall prepare and forthwith send to the **Contractor** for acceptance a final estimate for the quantity and price of the Work done and all retainage on the Work less all payments made to date, unless the **City's** inspection shows that Work required by the Contract remains incomplete or unsatisfactory, or that documentation required by the Contract has not been completed.

13.7.3. The making and acceptance of final payment will constitute a waiver of all claims by the **Contractor** against the **City** other than those previously made in writing and still unsettled.

13.8. Payments to Subcontractors.

13.8.1. Neither the **City** nor the **Engineer** shall have an obligation to pay or see to the payment of money to a Subcontractor, Sub-subcontractor, or Supplier except as may otherwise be required by law.

13.8.2. (*Reference:* M.G.L. c. 30, §39F)

(1)(a) Forthwith after the **Contractor** receives payment on account of a periodic estimate, the **Contractor** shall pay to each Subcontractor the amount paid for the labor performed and the materials furnished by that Subcontractor, less any amount specified in any court proceedings barring such payment and also less any amount claimed due from the Subcontractor by the **Contractor**.

(b) Not later than the sixty-fifth day after each Subcontractor substantially completes its Work in accordance with the Drawings and Specifications, the entire balance due under the subcontract, less amounts retained by the **City** as the estimated cost of completing the incomplete and unsatisfactory items of Work, shall be due the Subcontractor; and the **City** shall pay that amount to the **Contractor**. The **Contractor** shall forthwith pay to the Subcontractor the full amount received from the **City** less any amount specified in any court proceeding barring such payment and also less any amount claimed due from the Subcontractor by the **Contractor**.

(c) Each payment made by the **City** to the **Contractor** pursuant to paragraphs (a) and (b) of M.G.L. c. 30, §39F(1), for the labor performed and the materials furnished by a Subcontractor shall be made to the **Contractor** for the account of that Subcontractor; and the **City** shall take reasonable steps to compel the **Contractor** to make each such payment to each such Subcontractor. If the **City** has received a demand for direct payment from a Subcontractor for any amount which has already been included in a payment to the **Contractor** or which is to be include in a payment to the **Contractor** for payment to the Subcontractor as provided in paragraphs (a) and (b) of M.G.L. c. 30, §39F(1), the **City** shall act upon the demand as provided in M.G.L. c. 30, §39F.

(d) If, within seventy (70) days after the Subcontractor has substantially completed the subcontract Work, the Subcontractor has not received from the **Contractor** the balance due under the subcontract including any amount due for extra labor and materials furnished to the **Contractor**, less any amount retained by the **City** as the estimated cost of completing the incomplete and unsatisfactory items of Work, the Subcontractor may demand direct payment of that balance from the **City**. The demand shall be by a sworn statement delivered to or sent by certified mail to the **City**, and a copy shall be delivered to or sent by certified mail to the **Contractor** at the same time. The demand shall contain a detailed breakdown of the balance due under the subcontract and also a statement of the status of completion of the subcontract Work. [The demand letter shall indicate the certified mail number assigned by the postal service or the date of delivery to the **Contractor**.] Any demand made after substantial completion of the subcontract Work shall be valid even if delivered or mailed prior to the seventieth day after the Subcontractor has substantially completed the subcontract Work. Within ten (10) days after the Subcontractor has delivered or so mailed the demand to the **City** and delivered or so mailed a copy to the **Contractor**, the **Contractor** may reply to the demand. The reply shall be by a sworn statement delivered to or sent by certified mail to the **City**, and a copy shall be delivered to or sent by certified mail to the Subcontractor at the same time. The reply shall contain a detailed breakdown of the balance due under the subcontract, including any amount due for extra labor and materials furnished to the **Contractor** and of the amount due for each claim made by the **Contractor** against the Subcontractor.

(e) Within fifteen (15) days after receipt of the demand by the **City**, but in no event

prior to the seventieth day after substantial completion of the subcontract Work, the **City** shall make direct payment to the Subcontractor of the balance due under the subcontract, including any amount due for extra labor and materials furnished to the **Contractor**, less any amount (i) retained by the **City** as the estimated cost of completing the incomplete or unsatisfactory items of Work, (ii) specified in a ny court proceedings barring such payment, or (iii) disputed by the **Contractor** in the sworn reply; provided that the **City** shall not deduct from a direct payment any amount as provided in part (iii) if the reply is not sworn to or for which the sworn reply does not contain the detailed breakdown required by the previous paragraph. The **City** shall make further direct payments to the Subcontractor forthwith after the removal of the basis for deductions from direct payments made as provided in parts (i) and (ii) of this paragraph.

(f) The **City** shall forthwith deposit the amount deducted from a direct payment as provided in part (iii) of the previous paragraph in an interest-bearing joint account in the names of the **Contractor** and the Subcontractor in a bank in Massachusetts selected by the **City** or agreed upon by the **Contractor** and the Subcontractor and shall notify the **Contractor** and the Subcontractor of the date of the deposit and the bank receiving the deposit. The bank shall pay the amount in the account, including accrued interest, as provided in an agreement between the **Contractor** and the Subcontractor or as determined by decree of a court of competent jurisdiction.

(g) All direct payments and all deductions from demands for direct payments deposited in an interest-bearing account or accounts in a bank pursuant to the previous paragraph shall be made out of amounts payable to the **Contractor** at the time of receipt of a demand for direct payment from a Subcontractor and out of amounts which later become payable to the **Contractor** and in the order of receipt of such demands from Subcontractors. All direct payments shall discharge the obligation of the **City** to the **Contractor** to the extent of such payment.

(h) The **City** shall deduct from payments to a **Contractor** amounts which, together with the deposits in interest-bearing accounts pursuant to paragraph (f), are sufficient to satisfy all unpaid balances of demands for direct payment received from Subcontractors. All such amounts shall be earmarked for such direct payments, and the Subcontractors shall have a right in such deductions prior to any claims against such amounts by creditors of the **Contractor**.

(2) Any assignment by a Subcontractor of the rights under this section to a surety company furnishing a bond under the provisions of M.G.L. c. 149, §29 shall be invalid. The assignment and subrogation rights of the surety to amounts included in a demand for direct payment which are in the possession of the **City** or which are on deposit pursuant to paragraph (g) shall be subordinate to the rights of all Subcontractors who are entitled to be paid under this section and who have not been paid in full.

(3) A **Contractor** or a Subcontractor shall enforce a claim to any portion of the amount of a demand for direct payment deposited as provided in herein by a petition in equity in the superior court against the other and the bank shall not be a necessary party. A Subcontractor shall enforce a claim for direct payment or a right to require a deposit as provided in paragraph (f) by a petition in equity in the superior court against the **City** and the **Contractor** shall not be a necessary party. Upon motion of any party the court shall advance for speedy trial any petition filed as provided in this paragraph. M.G.L. c. 231, §§59 and 59B shall apply to such petitions. The court shall enter an interlocutory decree upon which execution shall issue for any part of a claim found due pursuant to §§59 and 59B and, upon motion of any party, shall advance for speedy trial the petition to collect the remainder of the claim. Any party aggrieved by such interlocutory decree shall have the right to appeal therefrom as from a final decree. The court shall not consolidate for trial the petition of any Subcontractor with the petition of one or more Subcontractors or the same general contract unless the court finds that a substantial portion of the evidence of the same events during the course of construction (other that the fact that the claims sought to be consolidated arise under the same general contract) is applicable to the petitions sought to be consolidated and that such consolidation will prevent unnecessary duplication of evidence. A decree in

any such proceeding shall not include interest on the disputed amount deposited in excess of the interest earned for the period of any such deposit. No person except a Subcontractor filing a demand for direct payment for which no funds due the **Contractor** are available for direct payment shall have a right to file a petition in court of equity against the **City** claiming a demand for direct payment is premature, and such Subcontractor must file the petition before the **City** has made a direct payment to the Subcontractor and has made a deposit of the disputed portion as provided in part (iii) of paragraph (e) and in paragraph (f).

(4) In any petition to collect any claim for which a Subcontractor has filed a demand for direct payment the court shall, upon motion of the **Contractor**, reduce by the amount of any deposit of a disputed amount by the **City** as provided in part (iii) of paragraph (e) and in paragraph (f) any amount held under a trustee writ or pursuant to a restraining order or injunction.

ARTICLE 14 SUBSTANTIAL COMPLETION

14.1. Substantial Completion.

14.1.1. Upon Substantial Completion of the Work, the **Contractor** shall present in writing to the **City** its certification that the Work has been substantially completed and include in its certification (1) a list of items to be completed or corrected, (2) all special warranties required by the Contract Documents, endorsed by the **Contractor** and in a form reasonably acceptable to the **Engineer** and (3) the permits and certificates referred to in 13.7.1., or elsewhere. The failure to include any item on the list mentioned in the preceding sentence does not alter the responsibility of the **Contractor** to complete all Work in accordance with the Contract Documents. When the **Engineer** on the basis of an inspection determines that the Work or designated portion thereof is substantially complete and the other conditions have been met, the **Engineer** will then prepare a certificate of Substantial Completion which shall establish the date of Substantial Completion, shall state the responsibilities of the **City** and the **Contractor** for security, maintenance, heat, utilities, damage to the Work, and insurance, and shall fix the time within which the **Contractor** shall complete the items listed therein. The certificate of Substantial Completion shall be submitted to the **City** and the **Contractor** for their written acceptance of the responsibilities assigned to them in such certificate.

14.1.2. Within twenty-one (21) days after receipt of the certification from the **Contractor**, the **City** shall present to the **Contractor** either a written declaration that the Work has been substantially completed or an itemized list of incomplete or unsatisfactory work items required by the Contract sufficient to demonstrate that the Work has not been substantially completed. The **City** may include with such list a notice setting forth a reasonable time within which the **Contractor** must achieve Substantial Completion of the Work. If the **City** fails to respond, by presentation of a written declaration or itemized list as aforesaid, to the **Contractor's** certificati on within the twenty-one (21) day period, the **Contractor's** certification shall take effect as the **City's** declaration that the Work has been substantially completed.

14.2. Partial Use or Occupancy of the Premises.

14.2.1. The **City** may occupy or use any completed or partially completed portion of the Work at any stage. Such partial occupancy or use may begin whether or not the portion is substantially complete, provided that the respective responsibilities of the **City** and the **Contractor** with respect to payments, retainage, if any, security, maintenance, heat, utilities, damage to the Work, insurance, correction of the Work, and warranties shall be established by agreement of the **City** and the **Contractor** or, absent such agreement, shall be determined by the **Engineer** subject to the right of either party to contest such determination as provided in Article 16.

14.2.2. Immediately prior to such partial occupancy or use, the **City**, the **Contractor** and the **Engineer** shall jointly inspect the area to be occupied or portion of the Work to be used in order to determine and record the condition of the Work.

14.2.3. Unless otherwise agreed upon, partial occupancy or use of a portion or portions of the Work shall not constitute acceptance of Work not complying with the requirements of the Contract

Documents.

14.2.4. (*Reference:* M.G.L. c. 30, §39G). Within sixty-five (65) days after the effective date of a declaration of Substantial Completion, the **City** shall prepare and send to the **Contractor** for acceptance a Substantial Completion estimate for the quantity and price of the Work done and all but one percent (1%) retainage on that Work, including the quantity, price and all but one percent (1%) retainage for the undisputed part of each item and extra work item in dispute, but excluding the disputed part thereof, less the estimated cost of completing all incomplete and unsatisfactory items and less the total periodic payments made to date for the Work. The **City** shall also deduct from the Substantial Completion estimate an amount equal to the sum of all demands for direct payment filed by Subcontractors and not yet paid to Subcontractors or deposited in joint accounts pursuant to M.G.L. c. 30, §39F.

14.2.5. (*Reference:* M.G.L. c. 30, §39G). If the **City** fails to prepare and send to the **Contractor** any Substantial Completion estimate required by the provisions herein on or before the date specified, the **City** shall pay to the **Contractor** interest on the amount which would have been due to the **Contractor** pursuant to such Substantial Completion estimate at the rate of three (3) percentage points above the rediscount rate then charged by the Federal Reserve Bank of Boston from such date to the date on which the **City** sends that Substantial Completion estimate to the **Contractor** for acceptance or to the date of payment therefor, whichever occurs first. The **City** shall include the amount of such interest in the Substantial Completion estimate.

14.2.6. (*Reference:* M.G.L. c. 30, §39G). Within fifteen (15) days after the effective date of the declaration of Substantial Completion, the **City** shall send to the **Contractor** by certified mail, return receipt requested, a complete list of all incomplete or unsatisfactory items, and unless delayed by causes beyond its control, the **Contractor** shall complete all such items within forty-five (45) days after the receipt of such list or before the date for final payment and acceptance, whichever is later. If the **Contractor** fails to complete such Work within such time, the **City** may, subsequent to seven (7) days' written notice to the **Contractor** by certified mail, return receipt requested, terminate the Contract and complete the incomplete or unsatisfactory items and charge the cost of same to the **Contractor**.

14.3. Final Inspection.

14.3.1. Upon written notice from the **Contractor** that the entire Work or an agreed portion thereof is complete, the **Engineer** will make a final inspection with the **City** and the **Contractor** and will notify the **Contractor** in writing of all particulars which this inspection reveals that the Work is incomplete or defective. The **Contractor** shall immediately take such measures as are necessary to complete such Work or remedy such deficiencies.

ARTICLE 15 GUARANTEES AND WARRANTIES

15.1. In General.

15.1.1. All guarantees and warranties specifically called for by the Specifications shall expressly run to the benefit of the **City**.

15.2. Warranties.

15.2.1. Warranties required by the Contract Documents shall commence on the date of Substantial Completion of the Work or designated portion thereof, unless otherwise provided in the certificate of Substantial Completion.

15.2.2. The **Contractor** warrants that the materials and equipment furnished under the Contract will be new and of recent manufacture unless otherwise specified, and that all Work will be of good quality, free from faults and defects, and in conformance with the Contract Documents. Work not conforming to these requirements, including substitutions not properly approved and authorized, may be considered defective. The **Contractor's** warranty excludes remedy for damage or defect caused by

abuse, modifications not executed by the **Contractor**, improper or insufficient maintenance, improper operation, or normal wear and tear under normal usage. If required by the **Engineer**, the **Contractor** shall furnish satisfactory evidence as to the kind and quality of material and equipment.

15.2.3. The **Contractor** warrants that title to all Work covered by an application for payment will pass to the **City** either by incorporation in the construction or upon the receipt of payment by the **Contractor**, whichever occurs first, free and clear of all liens. The **Contractor** further agrees that the submission of any application for payment shall conclusively be deemed to waive all liens with respect to said Work to which the **Contractor** may then be entitled, provided that such waiver of the lien rights shall not waive the **Contractor's** right to payment for such Work.

15.2.4. The **Contractor** warrants and guarantees that title to all Work, materials, and equipment covered by any application for payment, whether incorporated in the Project or not, will pass to the **City** no later than the time of payment free and clear of all liens.

15.2.5. No materials or supplies for the Work shall be purchased by the **Contractor** or Subcontractor subject to any chattel mortgage or under a conditional sale contract or other agreement by which an interest is retained by the seller. The **Contractor** warrants that it has good title to all materials and supplies used by it in the Work, free from all liens, claims and incumbrances.

15.2.6. The **Contractor** shall indemnify and hold the **City** harmless from all claims growing out of the lawful demands of Subcontractors, laborers, workers, mechanics, materialpersons, and furnishers of machinery and parts thereof, equipment, power tools, and all supplies, including commissary, incurred in the furtherance of the performance of this Contract. The **Contractor** shall at the **City's** request, furnish satisfactory evidence that all obligations of the nature hereinabove designated have been paid, discharged, or waived. If the **Contractor** fails to do so, then the **City** may, after having served written notice on the **Contractor** either pay unpaid bills, of which the **City** has written notice, direct, or withhold from the **Contractor's** unpaid compensation a sum of money deemed reasonably sufficient to pay any and all such lawful claims until satisfactory evidence is furnished that all liabilities have been fully discharged whereupon payment to the **Contractor** shall be resumed, in accordance with the terms of this Contract, but in no event shall the provisions of this sentence be construed to impose any obligations on the **City** to either the **Contractor** or its surety. In paying any unpaid bills of the **Contractor**, the **City** shall be deemed the agent of the **Contractor** and any payment so made by the **City** shall be considered as payment made under the Contract by the **City** to the **Contractor** and the **City** shall not be liable to the **Contractor** for any such payment made in good faith.

15.3. Extended Warranties and Guarantees.

15.3.1. Any defective Work that is either corrected or replaced will be warranted and guaranteed for a period of one (1) year from the date of such correction or replacement.

ARTICLE 16 CLAIMS

16.1. In General.

16.1.1. Written Notice. A Claim must be made by written notice to the other party.

16.1.2. Content of Notice. The notice must include all written supporting data.

16.1.3. Burden of Proof. The party making the Claim must substantiate the Claim.

16.2. Time Limits on Claims.

16.2.1. Unless otherwise provided, all Claims must be made within twenty-one (21) days after the occurrence of the event giving rise to such Claim or within twenty-one (21) days after the claimant first recognizes the condition giving rise to the Claim, whichever is later. Any change or addition to a previously made Claim shall be made by a written notice within the twenty-one-day period in order to be

valid.

16.3. Continuing Contract Performance.

16.3.1. Pending final resolution of a Claim including arbitration, unless otherwise agreed in writing, the **Contractor** shall proceed diligently with performance of the Contract and the **City** shall continue to make payments in accordance with the Contract Documents.

16.4. Types of Claims.

16.4.1. Claims for Differing Subsurface or Latent Physical Conditions. (*Reference:* M.G.L. c. 30, §39N). If, during the progress of the Work, the **Contractor** or the **City** discovers that the actual subsurface or latent physical conditions encountered at the Site differ substantially or materially from those shown on the Drawings or indicated in the Contract Documents, either the **Contractor** or the **City** may request an equitable adjustment in the Contract Sum of the Contract applying to Work affected by the differing Site conditions. A request for such an adjustment shall be in writing and shall be delivered by the party making such claim to the other party as soon as possible after such conditions are discovered. Upon receipt of such a claim from a **Contractor**, or upon its own initiative, the **City** shall make an investigation of such physical conditions, and if they differ substantially or materially from those shown on the Drawings or indicated in the Contract Documents or from those ordinarily encountered and generally recognized as inherent in Work of the character provided for in the Drawings and Contract Documents and are of such a nature as to cause an increase or decrease in the cost of performance of the Work or a change in the construction methods required for the performance of the Work which results in an increase or decrease in the cost of the Work, the **City** shall make an equitable adjustment in the Contract Sum and the Contract shall be modified in writing accordingly.

16.4.2. Claims for Additional Cost. If the **Contractor** claims that any acts or omissions of the **City** or the **Engineer**, including any instructions or orders, whether oral, written, by drawings, or otherwise, involve extra cost or time, and the **Contractor** has not received a written acknowledgment by the **City** or the **Engineer** that extra payment will be made or time extended on account thereof, the **Contractor** shall promptly so notify the **Engineer** in writing of such Claim and shall proceed with the Work relating to such Claim and all rights of both parties with respect to such Claim shall be deemed to have been reserved. No Claim by the **Contractor** on account of such acts, omissions, instructions, or orders shall be valid unless the **Contractor** has so notified the **Engineer** before proceeding.

16.4.2.1. Under no circumstances shall a Claim be made for additional cost where adverse weather conditions are the basis for the Claim.

16.4.3. Claims for Additional Time. If the **Contractor** wishes to make a Claim for an increase in the Contract Time, written notice as provided herein shall be given. The **Contractor** shall have the burden of demonstrating the effect of the claimed delay on the Contract Time and shall furnish the **Engineer** with such documentation relating thereto as the **Engineer** may reasonably require. Under no circumstances shall the **Contractor** make a Claim for an increase in the Contract Time due to a change in the **Contractor's** early completion date. If the increase in the Contract Time extends beyond the Contract Time established by the **City**, only the time that so extends beyond the Contract Time shall be reviewed and considered. In the case of a continuing delay, only one Claim is necessary.

16.4.3.1. Under no circumstances shall a Claim be made for additional time where adverse weather conditions are the basis for the Claim.

16.4.4. Claims for Injury to Person or Damage to Property. Should either party to the Contract suffer injury to person or damage to property because of any error, omission, or act of the other party or of any of the other party's employees or agents or others for whose acts the other party is legally liable, a Claim will be made in writing to the other party within twenty-one (21) days of the occurrence of the act giving rise to the injury or damage.

16.5. Review of Claims.

16.5.1. Initial Referral. All Claims, the bases of which arise prior to final payment or the earlier termination of the Contract, shall be referred initially to the **Engineer** for action as provided herein.

16.5.2. Time Period and Action. The **Engineer** shall review Claims and shall do one of the following within fourteen (14) days of receipt of the Claim:

16.5.2.1. defer any action with respect to all or any part of a Claim for the purpose of requesting and receiving additional information from either party;

16.5.2.2. decline in writing to render a decision for any reason which it deems appropriate (including, but not limited to, the fact that the Claim involves allegations of fault on the part of the **Engineer**); or

16.5.2.3. render a decision on all or a part of the Claim.

16.5.3. If the **Engineer** requests additional information, the **Engineer** shall take action with respect to the Claim no later than fourteen (14) days after receipt of the additional information. The **Engineer** shall notify the parties in writing of its disposition of such Claim. If the **Engineer** renders a decision or declines to render a decision, either party may proceed in accordance with paragraph 16.7.

16.6. Decisions.

16.6.1. Decisions by the City or the Engineer. (*Reference:* M.G.L. c. 30, §39P). In every case in which this Contract requires the **City**, any official, or its **Engineer** to make a decision on interpretation of the Specifications, approval of equipment, material or any other approval, or progress of the Work, the decision shall be made promptly and, in any event, no later than fourteen (14) days after the written submission for decision; but if such decision requires extended investigation and study, the **City**, the official, or the **Engineer** shall, within fourteen (14) days after the receipt of the submission, give the party making the submission written notice of the reasons why the decision cannot be made within the thirty-day period and the date by which the decision will be made.

16.6.2. When Decision of the Engineer is Final and Binding. The decision of the **Engineer** shall be final and binding on the parties, unless a party files suit or a demand for arbitration within thirty (30) days after the date of the decision.

16.6.3. When Decision of the Engineer is Not Final and Binding. (*Reference:* M.G.L. c. 30, §39J). Notwithstanding any contrary provision of this Contract, no decision by the **City** or by the **Engineer** on a dispute, whether of fact or of law, arising under said Contract shall be final or conclusive if such decision is made in bad faith, fraudulently, capriciously, arbitrarily, is unsupported by substantial evidence, or is based upon error of law.

16.6.4. Resolved Claims. If a Claim is resolved, the **Engineer** shall obtain or prepare the appropriate documentation and provide the **City** and the **Contractor** with a copy of same.

16.7. Arbitration.

16.7.1. Controversies and Claims Subject to Arbitration. Any controversy of Claim arising out of or related to the Contract, or the breach thereof, shall be settled by arbitration in accordance with the Construction Industry Arbitration Rules of the American Arbitration Association, and judgment upon the award rendered by the arbitrator or arbitrators may be entered in any court having jurisdiction thereof, except controversies of Claims relating to aesthetic effect, subject to the provisions of paragraph 16.7.7. In any such arbitration in which the amount stated in the demand is $100,000 or less, the American Arbitration Association shall appoint a single arbitrator in accordance with such Rules, who shall be a lawyer. In any such arbitration in which the amount stated in the demand is in excess of $100,000, the

demand shall include the name of an arbitrator appointed by the claimant. The respondent shall appoint a second arbitrator and shall notify the claimant in writing of such appointment within thirty (30) days of receipt of the demand, failing which the matter shall be decided by the arbitrator named in the claimant's demand. Within thirty (30) days after the claimant's receipt of notice of the appointment of the second arbitrator, the two arbitrators shall appoint a neutral arbitrator and shall notify the parties in writing of such appointment, failing which either party may apply to the American Arbitration Association to appoint such neutral arbitrator. If such neutral arbitrator is appointed by the American Arbitration Association, he or she shall be a lawyer.

16.7.2. Rules for Arbitration. If the neutral arbitrator is appointed by the American Arbitration Association, the said Association shall administer the arbitration and its Construction Industry Arbitration Rules shall govern all aspects of the proceeding including the enforcement of any award. If the neutral arbitrator is not appointed by the American Arbitration Association, then the panel of arbitrators shall act as the administrator of the arbitration but the Construction Industry Arbitration Rules of the Association shall nonetheless govern all aspects of the proceeding, including the enforcement of any award, provided however that the arbitration panel shall have all of the powers and duties conferred on the Association pursuant to said rules. In addition, the following rules shall govern the selection of arbitrators and the proceedings:

16.7.2.1. Neither party may appoint as arbitrator an employee or an owner of that party, nor the parent, spouse, or child of an employee or owner of that party.

16.7.2.2. After the neutral arbitrator has been appointed, neither party may engage in *ex parte* communication with any arbitrator.

16.7.3. When Arbitration May Be Demanded. Demand for arbitration of any Claim, the basis of which arises prior to final payment or the earlier termination of the Contract may not be made before the earlier of (1) the date on which the **Engineer** has rendered a written decision on the Claim or has notified the parties in writing that such decision will not be rendered or (2) forty-five (45) days following receipt by the **Engineer** of a written request for a decision sent by registered or certified mail to both the **Engineer** and the other party to this Contract.

16.7.3.1. In no event shall a demand for arbitration be made after the date when the institution of legal or equitable proceedings based on such Claim would be barred by the applicable statute of limitations.

16.7.4. Limitation on Consolidation or Joinder. No arbitration arising out of or relating to the Contract Documents shall include, by consolidation or joinder or in any other manner, the **Engineer**, the **Engineer's** employees or consultants, except by written consent containing specific reference to the Contract and signed by the **Engineer**, the **City**, the **Contractor,** and any other person or entity sought to be joined. No arbitration shall include, by consolidation or joinder or in any other manner, parties other than the **City**, the **Contractor**, a separate contractor, and other persons substantially involved in a common question of fact or law whose presence is required if complete relief is to be accorded in arbitration. No person or entity other than the **City**, the **Contractor,** or a separate contractor shall be included as an original third party or additional third party to an arbitration whose interest or responsibility is insubstantial. Consent to arbitration involving an additional person or entity shall not constitute consent to arbitration of a dispute not described therein or with a person or entity so named or described herein. The foregoing agreement to arbitrate and other agreements to arbitrate with an additional person or entity duly consented to by parties to the Contract shall be specifically enforceable under applicable law in any court having jurisdiction thereof.

16.7.5. Claims and Timely Assertion of Claims. A party who files a notice of demand for arbitration must assert in the demand all Claims then known to that party on which arbitration is permitted to be demanded. When a party fails to include a Claim through oversight, inadvertence, or excusable neglect, or when a Claim has matured or been acquired subsequently, the arbitrator or arbitrators may permit amendment.

16.7.6. Award Final. The award rendered by the arbitrator or arbitrators shall be final, and judgment may be entered upon it in accordance with applicable law in any court having jurisdiction thereof.

16.7.7. The City's Reservation of Rights. Notwithstanding any provision contained in this Article 16 or elsewhere in the Contract Documents, the **City** reserves the following rights in connection with Claims between the **City** and the **Contractor**, which rights may be exercised by the **City** unilaterally, in the **City's** sole discretion, and without the consent of the **Contractor**:

16.7.7.1. the right to institute legal action against the **Contractor** in any court of competent jurisdiction in lieu of demanding arbitration, in which case the dispute or disputes which are the subject of such action shall be decided by such court, and not by arbitration;

16.7.7.2. the right to obtain from any court of competent jurisdiction a stay of any arbitration instituted by the **Contractor**, provided that the application for such stay is made before the appointment of the neutral arbitrator in such arbitration, in which case the dispute or disputes which are the subject of such arbitration shall be decided by such court and not by arbitration;

16.7.7.3. the right to require the **Contractor** to join as a party in any arbitration between the **City** and the **Engineer** relating to the Project, in which case the **Contractor** agrees to be bound by the decision of the arbitrator or arbitrators in such arbitration.

16.7.8. In case the **City** elects to proceed in accordance with 16.7.7.1. or 16.7.7.2. above, the word "litigation" shall be deemed to replace the word "arbitration" wherever the latter word appears in the Contract Documents.

ARTICLE 17 EMERGENCIES

17.1. In an emergency affecting the health and safety of persons or property, the **Contractor** shall act to prevent threatened damage, injury, or loss.

17.2. In emergencies affecting the health, safety, or protection of persons, the Work or property at the Site or adjacent thereto, the **Contractor**, without special instruction or authorization from the **City** or the **Engineer**, is obligated to act to prevent threatened damage, injury, or loss. The **Contractor** shall give the **Engineer** prompt written notice if the **Contractor** believes that any significant changes in the Work or variations from the Contract Documents have been caused thereby. If the **Engineer** determines that a change in the Contract Documents is required because of the action taken by the **Contractor** in response to such an emergency, a Work Change Directive or Change Order will be issued to document the consequences of such action.

ARTICLE 18 TERMINATION OR SUSPENSION OF THE CONTRACT

18.1. Suspension by the City.

18.1.1. At any time and without cause, the **City** may suspend the Work or any portion thereof for a period of not more than ninety (90) days by notice in writing to the **Contractor** and the **Engineer** which will fix the date on which Work will be resumed. The **Contractor** shall resume Work on the date so fixed. The **Contractor** shall be allowed an adjustment in the Contract Sum or an extension of the Contract Time, or both, directly attributable to any such suspension if the **Contractor** makes an approved Claim therefor.

18.1.2. If the Work is defective, if the **Contractor** fails to provide a sufficient number of skilled workers or suitable materials or equipment, or if the **Contractor** defaults or neglects to carry out the Work in accordance with the Contract Documents and fails within a seven-day period after receipt of written notice from the **City** to begin and prosecute correction of such default or neglect with diligence and promptness, the **City** may correct such deficiencies, without prejudice to other remedies the **City** may

have. In such case, an appropriate Work Change Directive shall be issued deducting from payments then or thereafter due to the **Contractor** the cost of correcting such deficiencies including compensation for the **Engineer's** additional services and expenses made necessary by such default, neglect, or failure and any and all direct, indirect, or consequential costs associated with the order to stop the Work. If such payments then or thereafter due the **Contractor** are not sufficient to cover such amounts, the **Contractor** shall immediately pay the difference to the **City**. The **Contractor** shall remain responsible for maintaining progress and shall not be entitled to any increase in the Contract Time or the Contract Sum.

18.2. Termination by the Contractor.

18.2.1. If, through no act or fault of the **Contractor**, a Subcontractor, or a Sub-subcontractor, the Work is suspended for a period of more than ninety (90) days by the **City**, or under an order of court or other public authority, or the **Engineer** fails to act on any application for payment within thirty (30) days after it is submitted in proper form and content or the **City** fails for thirty (30) days to pay the **Contractor** any sum finally determined to be due, then the **Contractor** may terminate the Contract upon seven (7) days' written notice to the **City**, provided that the **City** does not remedy such suspension or failure within that time.

18.3. Termination by the City.

18.3.1. If the **Contractor** is adjudged a bankrupt, or if the **Contractor** makes a general assignment for the benefit of the **Contractor's** creditors, or if a receiver is appointed on account of the **Contractor's** insolvency, or if the **Contractor** persistently or repeatedly refuses or fails, except in cases for which extension of time is provided, to supply enough properly skilled workers or proper materials, or if the **Contractor** fails to make prompt payment to Subcontractors or for materials or labor, or persistently disregards laws, ordinances, rules, regulations, or orders of any public authority having jurisdiction or disregards an instruction, order, or decision of the **Engineer**, or otherwise is guilty of substantial violation of any provision of the Contract, then the **Contractor** shall be in default, and the **City** may, without prejudice to any other right or remedy and upon written notice to the **Contractor**, take possession of all materials, tools, appliances, equipment, construction equipment and machinery and vehicles, offices and other facilities on the Project Site, and all materials intended for the Work, wherever stored, and, seven (7) days after such notice, may terminate the employment of the **Contractor**, accept assignment of any or all subcontracts pursuant to Paragraph 6.6.1.1 and finish the Work by whatever method the **City** may deem expedient. The **City** shall be entitled to collect from the **Contractor** all direct, indirect, and consequential damages suffered by the **City** on account of the **Contractor's** default, including without limitation additional services and expenses of the **Engineer** made necessary thereby. The **City** shall be entitled to hold all amounts due to the **Contractor** at the date of termination until all of the **City's** damages have been established, and to apply such amounts to such damages.

18.3.2. (*Reference:* Cambridge Municipal Code Chapter 2.117, Section 2.117.110C). In the event the **Contractor** or any of its agents or employees violates any provision of Cambridge Municipal Code Chapter 2.117 which is applicable to **City** contractors in connection with the awarding, administration, or performance of the Contract, the **City** may terminate the Contract.

ARTICLE 19 AMERICANS WITH DISABILITIES ACT (42 U.S. 12131)

19.1. On July 26, 1994, the Americans with Disabilities Act ("the Act") became effective for employers of fifteen or more employees.

19.2. The Act protects against discrimination of the basis of "disability," which is defined as a physical or mental impairment that substantially limits at least one "major life activity;" or discrimination against an individual who has a record of such impairment; or discrimination against an individual being regarded - even if inaccurately - as having such impairment. The Act also expressly prohibits job discrimination that is based on any individual's relationship or association with a disabled person.

19.3. If the **Contractor** is subject to the Act, it must comply with its provisions.

ARTICLE 20 WRITTEN NOTICE TO THE PARTIES

20.1. In General.

20.1.1. All written communications from the **Engineer** to the **Contractor** shall be copied to the **City**. All written communications from the **Contractor** to the **Engineer** shall be copied to the **City**. All written communications from the **Contractor** to the **City** shall be copied to the **Engineer**.

20.2. Addresses.

20.2.1. To the City. Written notice to the **City** shall be sent or hand-delivered to:

City Manager
City of Cambridge
795 Massachusetts Avenue
Cambridge, MA 02139

20.2.2. To the Contractor. Both the address given on the bid form upon which the Agreement is founded and the **Contractor's** office at or near the Site of the Work are hereby designated as places to either of which notices, letters, and other communications to the **Contractor** shall be certified, mailed, or delivered. Delivery of any notice, letter, or other communication to the **Contractor** at or depositing same in a postpaid wrapper directed to either place shall be deemed sufficient service thereof upon the **Contractor**. Written notice shall be deemed to have been duly served on the **Contractor** if it is sent or hand-delivered to any member or officer of the **Contractor**. The date of said service shall be the date of such delivery or mailing. The address may be changed at any time by an instrument in writing, executed and acknowledged by the **Contractor** and delivered to the **City** and to the **Engineer**. Nothing herein contained shall be deemed to preclude or render inoperative the service of any notice, letter. or other communication upon the **Contractor** personally. Moreover, any notice, letter, or other communication required under the Contract may be served on the **Contractor's** representative at job meetings. The **Contractor** shall provide the **City** with its change of address seven (7) days prior to its effective date.

20.2.3. To the Engineer. Written notice to the **Engineer** shall be sent or hand-delivered to the address appearing on the Project Manual. Written notice shall be deemed to have been duly served on the **Engineer** if it is sent or hand-delivered to any member or officer of the **Engineer**.

ARTICLE 21 MISCELLANEOUS PROVISIONS

21.1. Governing Law.

21.1.1. This Contract shall be governed by the laws of the Commonwealth of Massachusetts.

21.2. Venue.

21.2.1. Venue for any court action or proceeding shall be Middlesex County in the Commonwealth of Massachusetts only. The **Contractor**, all Subcontractors, and Suppliers waive any and all jurisdictional and venue defenses.

21.3. Successors and Assigns.

21.3.1. The **Contractor** shall not assign, in whole or in part, its rights and obligations under the Contract Documents without prior written consent of the **City**. An assignment without the prior written consent of the **City** shall not relieve the **Contractor** of its obligations thereunder.

21.3.2. The **City** and the **Contractor** respectively bind themselves, their partners, successors, assigns, and legal representatives to the other party hereto and to partners, successors, assigns, and legal representatives of such other party in respect to covenants, agreements, and obligations contained in the Contract Documents.

21.4. Statutory Limitation Period.

21.4.1. It is expressly agreed that the obligations of the **Contractor** hereunder arise out of contractual duties, and that the failure of the **Contractor** to comply with the requirements of the Contract Documents shall constitute a breach of contract, not a tort, for the purpose of applicable statutes of limitations and repose. Any cause of action which the **City** may have on account of such failure shall be deemed to accrue only when the **City** has obtained actual knowledge of such failure, not before.

21.5. Rights and Remedies.

21.5.1. Duties and obligations imposed by the Contract Documents and rights and remedies available thereunder shall be in addition to and not a limitation of duties, obligations, rights, and remedies otherwise imposed or available by law.

21.5.2. No action or failure to act by the **City**, the **Engineer,** or the **Contractor** shall constitute a waiver of a right or duty afforded them under the Contract, nor shall such action or failure to act constitute approval of or acquiescence in a breach thereunder, except as may be specifically agreed in writing.

THIS IS THE END OF THE GENERAL TERMS AND CONDITIONS

File No. 5175 – Bicycle Parking Racks Installation

Scope of Services Specifications

1. General

The City of Cambridge is seeking contractors to install DERO™ Bicycle Racks (or similar products) at various locations throughout the City on public and school property on an "as needed" basis for a period of one year. The contract may be renewed for two (2) additional twelve-month periods at the sole discretion of the awarding authority. The payment and performance obligations for each succeeding year of a multi-year contract will be subject to appropriation or availability of other funds such as State or Federal grants.

The Installation of Bicycle Parking Racks shall take place at various locations within the City of Cambridge, for the Community Development Dept., all in accordance with the attached specifications.

It is of utmost importance that the Contractor thoroughly understands the contract documents and specifications in their entirety and that this knowledge is shared with all staff.

2. Conditions

A. Bicycle Parking Coordinator. All work to be done under this contract shall be at the direction of the Bicycle Parking Coordinator of the Cambridge Community Development Department or an authorized representative ("Owner"). The "Owner" is the only authority to approve work performed by the Contractor, make field changes that are deemed necessary and approve estimates submitted by the Contractor for payment. The Bicycle Parking Coordinator, or an authorized representative, will be available at all times by phone, and can be on site if needed with very short notice, throughout the installation process.

B. Multiple installation stages. The installation program will occur in multiple stages, with a minimum of 20 racks to be installed per stage, as directed by the "owner". Each installation must be completed within the time of the delivery promise (when Contractor is granted a "notice to proceed"). No delivery promise of more than three weeks (for each stage of 20 racks) will be acceptable.

C. Specific locations will be provided. The "Owner" will identify specific locations. The Contractor will be provided with a list of all locations and a map. In addition, locations will be identified by site drawings and will be marked on site by the "Owner" using spray paint.

D. Racks will be supplied. The "Owner" will supply the Contractor, at no cost to the Contractor, with the bicycle racks, anchor bolts, and "tamper resistant" nuts. The City of Cambridge will also make available to the Contractor use of the "tamper resistant" bolt wrench tool. All materials will be picked up at the First Street Garage in East Cambridge (the entrance is on Thorndike Street).

E. Public Works permit required. The Contractor is responsible for obtaining a permit from the Department of Public Works ("Excavation and Trench" permit). Draft sidewalk and traffic access plans for construction management work zones, required by the permit, will be provided to the Contractor for each location by the "Owner". In addition, LAT/LON coordinates will be provided to the Contractor by the "Owner" for each location to facilitate obtaining DigSafe approval numbers. A single permit will suffice for all of the locations for each installation stage. Fees for

permits given by the City of Cambridge shall be waived.

F. Traffic & Parking permit required for "No Parking" signs. The Contractor is responsible for obtaining a permit from the Traffic, Parking, and Transportation Department. The contractor will be provided with a list and photographs of all locations where "No Parking Signs" are needed either for access to the location or for the staging of the Contractor's vehicle. Fees for permits given by the City of Cambridge shall be waived.

G. Police Detail. Scheduling Police Details shall be the responsibility of the Contractor. A Police Detail is to be present during all construction activity. To schedule a detail officer, call (617) 349-3350.

The Cambridge Police Department requires 24-hour advance notice to obtain a Police Detail, except in emergencies and 4-hour advance notice to cancel a detail.

The contractor must submit all signed detail forms to the project managers or engineer, so that Public Works can pay all submitted and approved Police detail invoices. Any invoices that are not approved will be the responsibility of the contractor to pay.

The City of Cambridge Police Department shall bill the City of Cambridge Department of Public Works or whatever department has oversight of the contract for the services of uniformed police officers provided by the Police Department.

The Contractor will be required to reimburse Public Works or whatever department oversight of the contract for Police Details, if the Contractor fails to show for the job or if the Contractor fails to cancel the detail with adequate advance notice.

H. Installation. The Contractor should use the attached specifications, "Bicycle Parking Specifications." The specifications are intended to include everything necessary for the proper installation and completion of the work, whether each necessary item is mentioned herein or not. If a discrepancy exists between Cambridge's specifications and either the manufacturer's specifications or the Contractor's best judgment, the Contractor shall consult the "Owner" for clarification. Upon installation of new bicycle rack, the work area shall be repaired to match existing conditions The Contractor shall dispose of any debris resulting from the installations, and to ensure the worksite is clean prior to departure.. Installed racks shall be free of any concrete or other residue. The "owner" reserves the right to request any small modifications to the installation process at any time in the interest of best suiting the needs of any particular situation or location. Any such modifications shall not be unduly burdensome to the Contractor.

I. Safe work zone. The Contractor is responsible for setting up a work zone that maintains safe and pedestrian access, safe bicycle access, and safe vehicular traffic by using orange cones and/or other appropriate devices, as indicated by the Sidewalk and Traffic Access Plan approved by the Department of Public Works in the contractor's permit. All temporary access shall conform to all state and federal disability access codes.

J. Improperly installed bicycle parking racks shall be removed and reset by the Contractor at the request of the City of Cambridge, at no expense to the Owner.

K. All work herein specified or called for on the design details shall be executed in accordance with all governing ordinances, laws and regulations that meet all local conditions. Additionally, any changes and/or additions in the work necessary to meet those ordinances, laws, regulations

and/or conditions shall be made without additional cost to the Owner. The entire installation shall fully comply with all local and state laws and ordinances and with all established codes applicable thereto. The Contractor shall assume payment of any other fees with this contract.

L. The Contactor shall not assign or sublet the whole or any part of this work without obtaining the prior consent of the Owner approving the specific party to whom it is proposed to sublet the same.

M. The Contractor shall provide and pay for all transportation required delivering and removing from the site all materials as required for the work shown and specified.

N. The Contractor shall furnish all such equipment, tools, labor, and materials (including epoxy, cement and bituminous concrete, stone-dust, water, tools) necessary to expedite work in an acceptable manner, to a speedy completion. The Contract is based on the Contractor furnishing equipment, tools and labor that are suitable to carry out this contract in a professional manner, unless otherwise herein specified.

O. City shall have the right to require alterations of, additions to, and deductions from the work shown on the design details or described in the specifications without rendering void the contract. All such items shall be covered in proposal form but shall not proceed with the changes until the City has given signed authorization. In each case, the price agreed to be paid for the work under the contract shall be increased or decreased for the work added or omitted. In the event the value of the work or cost adjustment furnished by the Contractor is unacceptable to the City, the contract shall be performed without reference to said change order.

P. If Contractor refuses or fails to execute the work with such diligence as will ensure its completion within the contract time and as specified in these Contract Documents, the City, by written notice to the Contractor, may terminate the Contractor's right to proceed with the contract.

Q. Contractor will register with Central Contractor Register (CCR), and show proof of registration.

R. Contractor will pay Davis-Bacon Act (40 USC 31) wage rates to laborers and mechanics employed by the Contractor.
http://www.eecbg.energy.gov/Downloads/EECBG_Program_Guidance_DBA_121709.pdf

File No. 5175 – Bicycle Parking Racks Installation

ITEM BR-1 BICYCLE RACK – SURFACE MOUNT, CONCRETE EACH

This specification is for the installation of "post and ring" style bicycle racks equipped with a surface mount on a concrete surface.

MATERIALS

The City of Cambridge will provide the bicycle rack to the contractor. It will be of type DERO™ "Bike Hitch, surface-mount", or equivalent.

Surface mount racks shall only be used on concrete surfaces that are in good condition and are relatively level.

Four 3 inch long, 3/8 inch diameter anchor bolts shall be used to secure the bicycle rack. Two of the nuts shall be tamper resistant, and shall be of "Breakaway Nut" type or "Triple-slot High Security" type, 3/8-16 galvanized steel.

CONSTRUCTION METHODS

1. Place the rack in the desired location, being careful to orient the rack in the correct direction as indicated by the spray paint markings on the ground. Mark the holes.
2. Drill four 3/8 inch diameter holes, 3 inches deep
3. Hammer in the anchor bolts
4. Use washers to level the rack as needed.
5. Set the rack in place with four ordinary nuts and tighten.
6. Once the rack is installed, replace two nuts from the bracket (opposite sides from each other) with tamper resistant fasteners. Be sure not to over tighten the tamper resistant nuts.
7. If needed, excess bolt shall be removed with an angle grinder.

The rack shall be vertical with a tolerance of +/- 1 degree. Two magnetic levels affixed to the rack post should be used in the field to ensure this tolerance is met.

COMPENSATION

Item No. BR-1 will be measured PER EACH installed bicycle rack complete-in-place. Price and payment shall constitute full compensation for complete compliance with requirements of this item, including all labor, equipment, materials, tools, incidental work, and construction methods.

File No. 5175 – Bicycle Parking Racks Installation

ITEM BR-2 BICYCLE RACK – SURFACE MOUNT, BRICK EACH

This specification is for the installation of "post and ring" style bicycle racks equipped with a surface mount on a brick surface where there is a concrete layer underneath. If there is not a concrete layer underneath (e.g., instead there is soil or asphalt underneath), this specification may not be used. The surface shall be in good condition and relatively level.

MATERIALS

The City of Cambridge will provide the bicycle rack to the contractor. It will be of type DERO™ "Bike Hitch, surface-mount", or equivalent. The contractor is responsible for all other materials besides the rack itself.

Four 3/8 inch diameter anchor bolts shall be used to secure the bicycle rack. NOTE that the length of the anchor bolt will vary depending on the thickness of the brick, and shall be long enough to penetrate the concrete by three inches. Two of the nuts shall be tamper resistant, and and shall be of "Breakaway Nut" type or "Triple-slot High Security" type, 3/8-16 galvanized steel.

CONSTRUCTION METHODS

1. Place the rack in the desired location, being careful to orient the rack in the correct direction as indicated by the spray paint markings on the ground. Mark the holes.
2. Drill four 1/2 to 9/16 inch diameter holes through the brick
3. Drill four 3/8 inch diameter holes, 3 inches deep, into the concrete
4. Hammer in the correct length anchor bolts, making sure that they go at least 2-3 inches into the concrete
5. Use washers to level the rack as needed.
6. Set the rack in place with four ordinary nuts and tighten in order to activate the anchor bolt.
7. Once the rack is installed, replace two nuts from the bracket (opposite sides from each other) with tamper resistant fasteners. Be sure not to over tighten the tamper resistant nuts.

The rack shall be vertical with a tolerance of +/- 1 degree. Two magnetic levels affixed to the rack post should be used in the field to ensure this tolerance is met.

COMPENSATION

Item No. BR-2 will be measured PER EACH installed bicycle rack complete-in-place. Price and payment shall constitute full compensation for complete compliance with requirements of this item, including all labor, equipment, materials, tools, incidental work, and construction methods.

File No. 5175 – Bicycle Parking Racks Installation

ITEM BR-3	**BICYCLE RACK – IN GROUND, CONCRETE SURFACE**	**EACH**
ITEM BR-4	**BICYCLE RACK – IN GROUND, BRICK SURFACE**	**EACH**

This specification is for the installation of "post and ring" style bicycle racks intended to be installed "in ground". If the surface is brick, there must be concrete underneath the brick to utilize this construction method.

MATERIALS

The city of Cambridge will provide the bicycle rack to the contractor. It will be of type DERO™ "Bike Hitch, in-ground mount", or equivalent.

CONSTRUCTION METHODS

A 4 inch diameter core hole shall be drilled no less than 6 inches deep into concrete. If the surface is brick, a core hole shall be drilled through the brick first.

The hole shall be filled with non-shrink grout for setting the bicycle racks shall be a pourable, quick-setting, non-metallic and non-shrinking cement grout conforming to ASTM C827 and Army Corps of Engineers Specification CRD-C-621, suitable for outdoor use in wet weather conditions. Quick setting grout is recommended. Hydraulic cement shall <u>not</u> be used as a substitute for grout.

The bicycle rack shall be centered into the hole, ensuring that the top of the rack is 35 inches above the sidewalk surface. Ensure that the rack is vertical, and is maintained level until the grout has set. The rack shall be vertical with a tolerance of +/- 1 degree. Two magnetic levels affixed to the rack post should be used in the field to ensure this tolerance is met.

COMPENSATION

Item Nos. BR-3 and BR-4 will be measured PER EACH installed complete-in-place. Price and payment shall constitute full compensation for complete compliance with requirements of this item, including all labor, equipment, materials, tools, incidental work, and construction methods.

File No. 5175 – Bicycle Parking Racks Installation

ITEM BR-5	**BICYCLE RACK – ASPHALT/TURF WITH FOOTING**	**EACH**
ITEM BR-6	**BICYCLE RACK – BRICK WITH FOOTING**	**EACH**

This specification is for the installation of "post and ring" style bicycle racks intended to be installed "in ground".

MATERIALS

The city of Cambridge will provide the bicycle rack to the contractor. It will be of type DERO™ "Bike Hitch, in-ground mount", or equivalent.

CONSTRUCTION METHODS

This construction method is to be used if there is not a concrete layer. Examples of this type of installation include asphalt, dirt, or turf surface or brick surface with no concrete underneath.

A 14 inch diameter cement concrete foundation shall be used, with a minimum depth of 12 inches.

The bicycle rack shall be centered into the hole, ensuring that the top of the rack is 35 inches above the sidewalk surface. Ensure that the rack is vertical, and is maintained level until the grout has set. The rack shall be vertical with a tolerance of +/- 1 degree. Two magnetic levels affixed to the rack post should be used in the field to ensure this tolerance is met.

COMPENSATION

Item Nos. BR-5 and BR-6 will be measured PER EACH installed complete-in-place. Price and payment shall constitute full compensation for complete compliance with requirements of this item, including all labor, equipment, materials, tools, incidental work, and construction methods.

File No. 5175 – Bicycle Parking Racks Installation

ITEM BR-7 BICYCLE RACK – RACKS ON RAIL, MOUNT ON CONCRETE EACH

This specification is for the installation of DERO™ "Swerve" or "Hoop Rack HD" bicycle racks (or equivalent) rail-mounted on a concrete surface. The surface shall be in good condition and relatively level.

MATERIALS

The City of Cambridge will provide the bicycle racks and the rails to the contractor. They will comprise between 3 to 6 racks per rail. The racks and the rails will be provided to contractor pre-assembled. They will be of type DERO™ "Swerve" or "Hoop Rack HD" rail-mounted, or equivalent. The City of Cambridge will also provide the Contractor with the anchor bolts, nuts, and tamper-resistant nuts (with appropriate tool). The contractor is responsible for all other materials besides the racks and rails itself.

The racks on the rails will be anchored in 6 locations total (regardless of number of racks). Six 3/8 inch diameter anchor bolts shall be used to secure the racks on the rails. NOTE that the length of the anchor bolt will vary depending on the thickness of the brick, and shall be long enough to penetrate the concrete by three inches. Three of the nuts shall be tamper resistant, and shall be of "Breakaway Nut" type or "Triple-slot High Security" type, 3/8-16 galvanized steel.

CONSTRUCTION METHODS

1. Place the racks on rails in the desired location as indicated by the spray paint markings. Mark the six holes.
2. Drill six 3/8 inch diameter holes, 3 inches deep
3. Hammer in the anchor bolts
4. Use washers to level the rack as needed.
5. Set the rack in place with six ordinary nuts and tighten.
6. Once the racks on rails are installed, replace three nuts from the bracket (two on one rail, one on the other) with tamper resistant fasteners. Be sure not to over tighten the tamper resistant nuts.
7. If needed, excess bolt shall be removed with an angle grinder.

COMPENSATION

Item No. BR-7 will be measured PER EACH installed bicycle rack complete-in-place. Price and payment shall constitute full compensation for complete compliance with requirements of this item, including all labor, equipment, materials, tools, incidental work, and construction methods.

File No. 5175 – Bicycle Parking Racks Installation

ITEM BR-8 BICYCLE RACK – RACKS ON RAIL, MOUNT ON BRICK EACH

This specification is for the installation of DERO™ "Swerve" or "Hoop Rack HD" bicycle racks (or equivalent) rail-mounted on a brick (with concrete underneath) surface. If there is not a concrete layer underneath (e.g., instead there is soil or asphalt underneath), this specification may not be used. The surface shall be in good condition and relatively level.

MATERIALS

The city of Cambridge will provide the bicycle racks and the rails to the contractor. They will comprise between 3 to 6 racks per rail. The racks and the rails will be provided to contractor pre-assembled. They will be of type DERO™ "Swerve" or "Hoop Rack HD" rail-mounted, or equivalent. The City of Cambridge will also provide the Contractor with the anchor bolts, nuts, and tamper-resistant nuts (with appropriate tool). The contractor is responsible for all other materials besides the racks and rails itself.

The racks on the rails will be anchored 6 locations total (regardless of number of racks). Six 3/8 inch diameter anchor bolts shall be used to secure the bicycle rack. NOTE that the length of the anchor bolt will vary depending on the thickness of the brick, and shall be long enough to penetrate the concrete by three inches. Three of the nuts shall be tamper resistant, and shall be of "Breakaway Nut" type or "Triple-slot High Security" type, 3/8-16 galvanized steel.

CONSTRUCTION METHODS

1. Place the rack in the desired location, being careful to orient the rack in the correct direction as indicated by the spray paint markings on the ground. Mark the holes.
2. Drill six 1/2 to 9/16 inch diameter holes through the brick
3. Drill six 3/8 inch diameter holes, 3 inches deep, into the concrete
4. Hammer in the correct length anchor bolts, making sure that they go 2 inches into the concrete
5. Use washers to level the rack as needed.
6. Set the rack in place with six ordinary nuts and tighten in order to activate the anchor bolt.
7. Once the racks on rails are installed, replace three nuts from the bracket (two on one rail, one on the other) with tamper resistant fasteners. Be sure not to over tighten the tamper resistant nuts.
8. If needed, excess bolt shall be removed with an angle grinder.

COMPENSATION

Item No. BR-8 will be measured PER EACH installed bicycle rack complete-in-place. Price and payment shall constitute full compensation for complete compliance with requirements of this item, including all labor, equipment, materials, tools, incidental work, and construction methods.

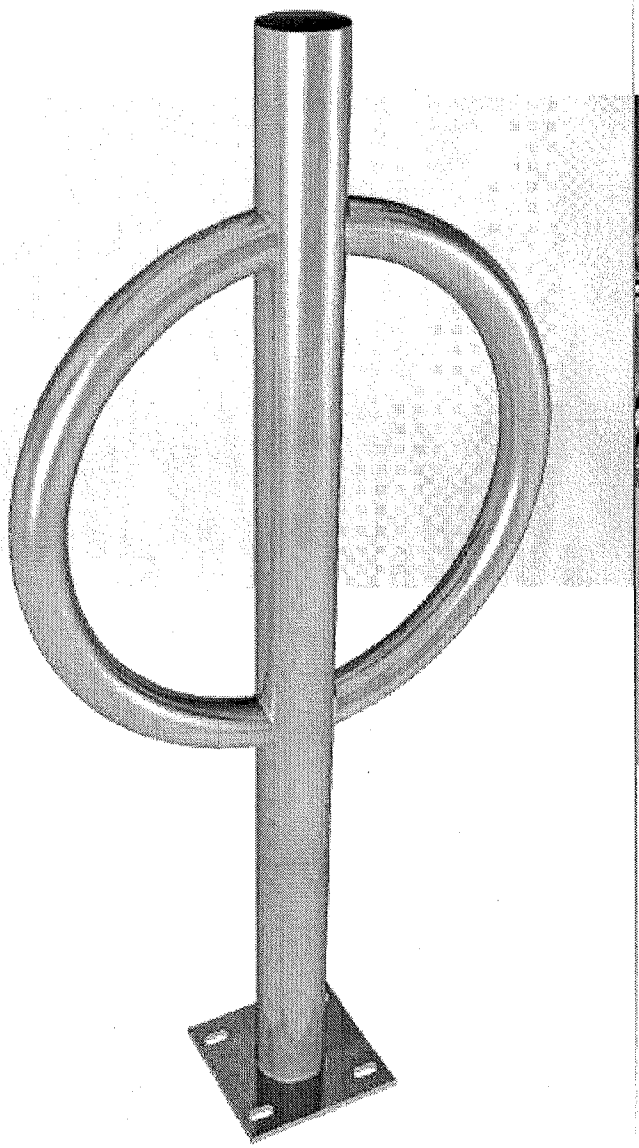

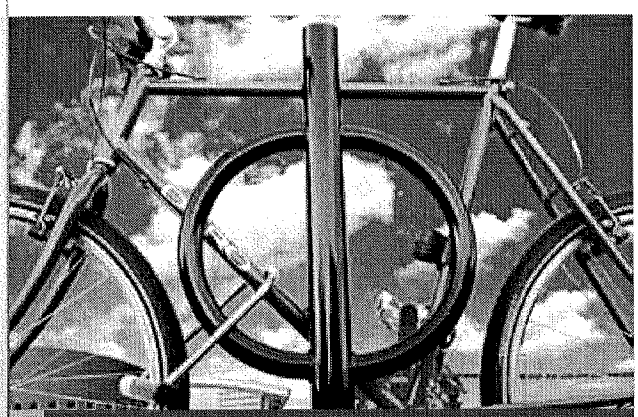

DERO

BIKE HITCH

- High security
- Great for sidewalk placement
- One unit parks two bikes

The Bike Hitch is an attractive and space efficient bike rack. The Bike Hitch was specifically designed for sidewalks and other narrow space applications. The rack's design restricts bikes to parking parallel with the rack so bikes won't protrude out into the sidewalk or street.

Your Logo Here!

We can include your organization's logo in the center of a specially designed Bike Hitch. Contact us for more details on this unique option.

DERO BIKE RACKS

www.dero.com 1.800.298.4915

U.S. GREEN BUILDING COUNCIL MEMBER

Printed on recycled paper

BIKE HITCH

Specifications and Space Use

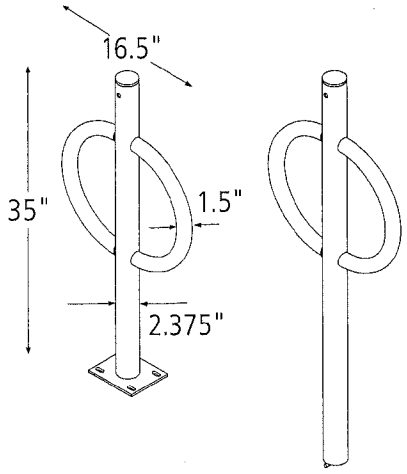

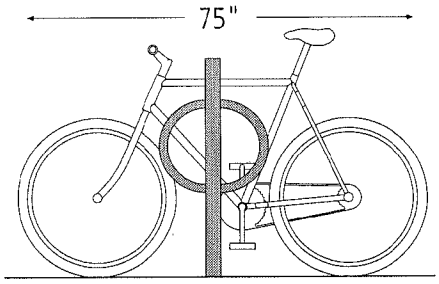

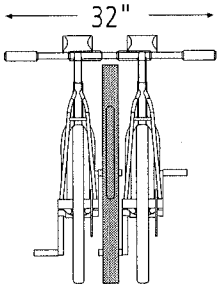

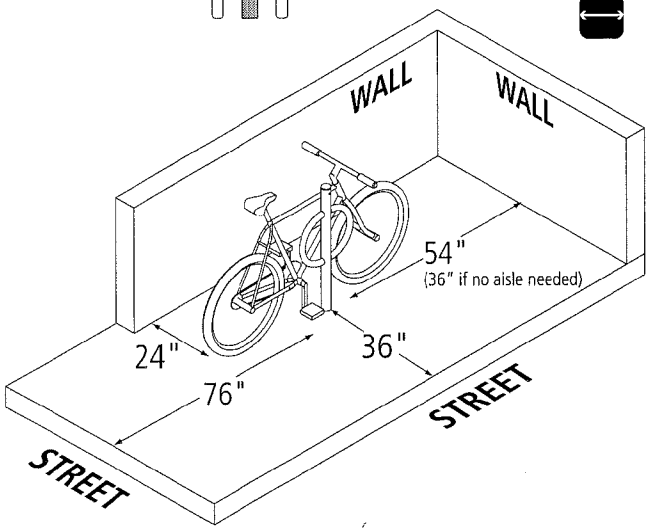

Product
Dero Bike Hitch
As manufactured by Dero Bike Racks

Capacity
2 Bikes

Materials
Centerbeam: 2" schedule 40 pipe (2.375" OD)
Ring: 1.5" OD 11 gauge tube

Finishes
An after fabrication hot dipped galvanized finish is standard. 250 TGIC powder coat colors, a thermoplastic coating and a stainless steel option are also available.

Our powder coat finish assures a high level of adhesion and durability by following these steps:
1. Sandblast
2. Iron phosphate pretreatment
3. Epoxy primer electrostatically applied
4. Final thick TGIC polyester powder coat

Stainless Steel: 304 grade stainless steel material finished in either a high polished shine or a satin finish.

A rubbery PVC Dip is also available

Installation Methods
In-ground mount is embedded into concrete base.
Surface mount has one 5" x 6" foot which is anchored to the ground with four anchors (included with rack).

Space Use and Setbacks

Wall Setbacks:
For racks set parallel to a wall:
Minimum: 12"
Recommended: 24"

For racks set perpendicular to a wall:
Minimum" 35" (centerline measurement)
Recommended: 38" (54" if aisle is needed between bike and wall)

Distance Between Racks:
Minimum: 24"
Recommended: 38"

Street Setbacks:
Minimum: 36"

Tools Needed for Installation

Tape Measure
Marker or Pencil
Masonry Drill Bit
Drill (Hammer drill recommended)
Hammer
Wrench 9/16"
Level
Washers (for leveling if necessary)

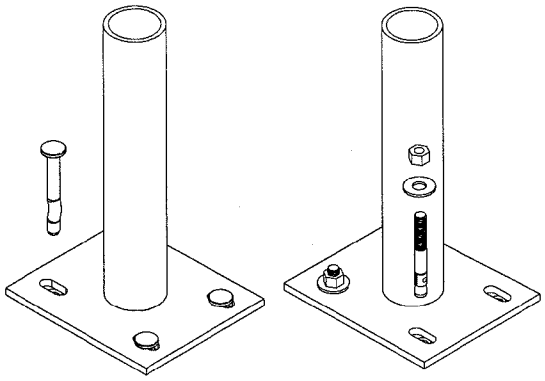

Concrete Spike *Wedge Anchor*

Recommended Base Materials:

Solid concrete is the best base material for installation. Ask your Dero Rack representative which anchor is appropriate for your application to ensure the proper anchors are shipped with your rack. Be sure nothing is underneath the base material that could be damaged by drilling.

Installation:

3/8" anchors are shipped with the rack. Place the rack in the desired location. Use a marker or pencil to outline the holes of the flange onto the base material. Drill the holes in accordance with the specifications shipped with the anchors. Make sure the holes are at least 6" away from any cracks in the base material.

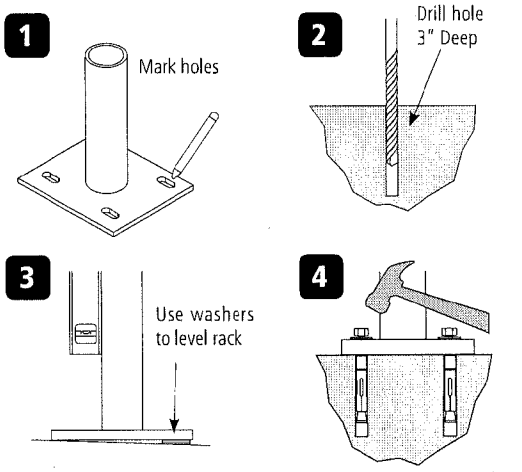

(Anchors will vary according to install surface)

Tamper Resistant Fasteners

The concrete spike is a permanent anchor. The top of the wedge anchor can also be pounded sideways after installation so that it cannot be removed. Other tamper resistant fasteners are also available for purchase.

When using the special tamper resistant nuts, always set and first tighten the anchors. Once the rack is installed, replace two nuts from the bracket (opposite sides from each other) with the tamper resistant fastener. DO NOT OVERTIGHTEN the tamper resistant nut.

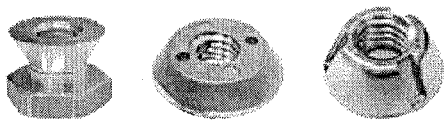

Breakaway Nut *Spanner Nut* *Triple-slot Nut*

Concrete Spike

If you have any questions about installation or other features of the Bike Bike Rack, please call us toll free at 1-800-298-4915

Tools needed for installation

Level	Hole coring machine with 4" bit
Cement mixing tub	Access to water hose
Shovel	Materials to build brace (see "Install Tip"
Trowel	at bottom of page)

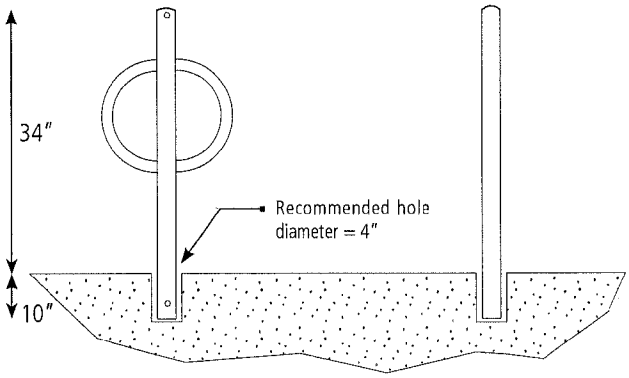

Installing into Existing Sidewalk

Core holes no less than 3" diameter (4" recommended) and no less than 6" deep into sidewalk. Place Bike Hitch into hole making sure the rack is level. Fill hole with Por-Rok or epoxy grout. 34-36" of the Bike Hitch should remain above the surface. Make sure Hitch is level and held in place until the grout has completely set.

Installing Into a New Sidewalk:

Stake Method:

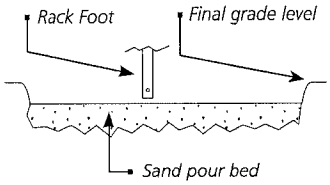

1 Use rack to measure exact location in pour bed.

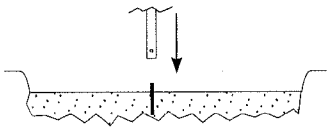

2 Pound stake into pour bed where end of rack will sit. Slide rack end onto stake. You may need to dig the end of the rack into the sand to make sure the rack sits at least 35" above final grade level. The stake keeps the rack straight while the concrete is being poured.

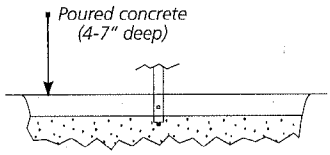

3 Make sure the rack is level and true. Pour concrete around the rack. Make sure the rack is not touched until the concrete has completely set.

INSTALL TIP

An easy way to brace the Bike Hitch while the grout sets is to bolt two 1x4" boards together at one end and clamp them onto the legs of the Bike Hitch like a clothes pin.

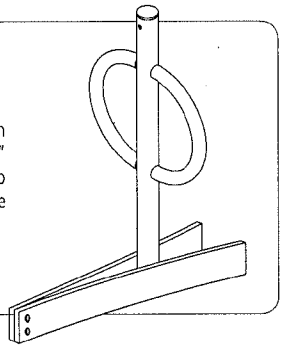

Sleeve Method:

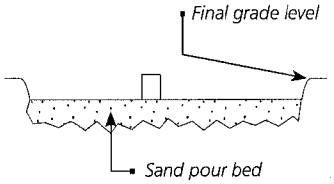

1 Place corrosion resistant sleeve (min. 3" inside diameter) in sand pour bed in exact location where rack will be installed. Make sure top of sleeve is at same level as desired finished concrete surface. Fill sleeve with sand to keep it in place and prevent it from filling with concrete.

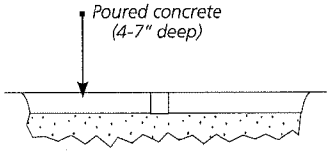

2 Pour concrete and allow to cure.

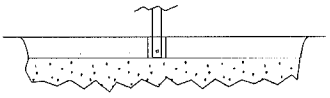

3 After appropriate cure time, dig out sand from sleeves and insert racks, making sure they are level and at the appropriate height. Pour in Por-Rok or epoxy grout and allow to set.

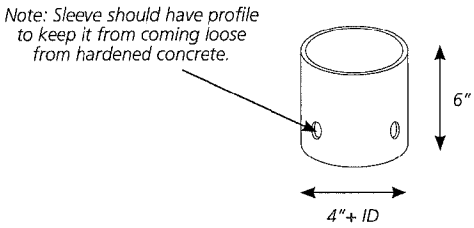

CONTRACT ATTACHMENT
NOTICE OF AMERICAN RECOVERY AND REINVESTMENT ACT (ARRA)
PERFORMANCE AND REPORTING REQUIREMENTS

TERMS FOR ALL ARRA CONRACTORS (SUB-RECIPIENTS OR VENDORS)

This Contract Attachment is being provided to all Contract recipients of ARRA funds to ensure that you have notice of key requirements upon which the receipt of ARRA funding is conditioned. You will be informed by your contracting Department if you will be receiving ARRA funds and whether under each contract you will be considered a "Sub-recipient" or a "Vendor". ARRA funding is considered "one-time" funding and will not be continued or replaced with appropriated or other funding once the ARRA contract portions are expended. These terms are already incorporated by reference through the federal grant or contract award from your contracting Department and are in addition to any performance, reporting or other terms already provided under your award and contract. ***Documentation of actual receipt of this attachment by the contractor contract manager or an authorized signatory shall be sufficient to bind the contractor to the terms of this attachment.***

RECORDKEEPING AND ACCESS TO RECORDS

Contractor and subcontractor recipients of ARRA funds, must maintain records, books, files and other data as specified in a Contract and in such detail to support compliance with contract terms, attainment of performance success criteria or performance measurements and successful completion of all contract performance requirements to properly substantiate claims for payment and that identify adequately the use of ARRA funds, which must be maintained for seven (7) years beginning the day after the final payment of ARRA funds or after the resolution of any litigation, claim, negotiation, audit or other inquiry involving the Contract. Transparency requirements under state and federal law (including Section 902) require a contractor to provide access to all such records and data to the contracting Department, the Executive Office for Administration and Finance, the Offices of the Attorney General, State Auditor, Inspector General or any state or federal compliance officer or inspector general assigned to ARRA reviews. Access to such records, including on-site reviews, interviews of officers and employees, and reproduction of such records at a reasonable expense, shall be provided during the Contractor's regular business hours and upon reasonable prior notice. **All contractors, whether deemed sub-recipients or vendors, must be prepared to provide any documents, records, data or other proof of performance, or related to their business activities that are paid for with ARRA funds.**

ENFORCEABILITY

In addition to all other remedies available to the City of Cambridge "The City" under applicable state and federal laws, in the event a Contractor or their subcontractors fail to comply with contract terms or with applicable federal and state requirements governing the use of ARRA funding, the City may withhold or suspend awards or recover any funds awarded under a contract following an audit by the Department.

FALSE CLAIMS OR PUBLIC CONCERNS

A Contractor shall promptly refer to its contracting Department any public concerns raised to the Contractor about the use of ARRA funds (Section 1514), or credible evidence that a principal, employee, agent, subcontractor or other person has committed a false claim (e.g., falsification of time sheets, reports or invoices) under the False Claims Act or has committed a criminal or civil violation pertaining to fraud, conflict of interest, bribery, gratuity, or similar misconduct involving ARRA funds. The Contractor acknowledges that Section 1865 of ARRA, amends Section 257 of the Trade Act of 1974 increasing false claims penalties to allow imprisonment up to 2 years, or fines or both.

REQUIRED JOB POSTINGS at www.mass.gov/jobquest

Since the primary purpose of ARRA is retention and creation of new jobs, the Governor's Economic Recovery Mobilization Act requires organizations and entities receiving full or partial ARRA funding to post job openings at JobQuest (the state's job bank) at www.mass.gov/jobquest. This website has instructions for posting jobs and managing job orders. A Business Service Representative located at one of the 37 Massachusetts One-Stop Career Centers statewide (at www.mass.gov/careercenters or Help Desk at 1-888-578-6599) can assist you with posting job openings and how to recruit applicants.

APPRENTICE REQUIREMENT

The Governor's Economic Recovery Mobilization Act requires 20% of the work hours on all ARRA funded public works projects with a contract award over $1 million to be performed by apprentices in bona fide Division of Apprenticeship Training (DAT) approved apprentice training program. This requirement applies to hourly wage employees employed on the project site, employed by the contractor or a subcontractor and subject to prevailing wage. Contact the contracting Department issuing ARRA funds and DAT at 617-626-5409 for implementation assistance.

EMPLOYEE WHISTLEBLOWER RIGHT AND PROTECTIONS

Section 1553 of ARRA provides protections for employees who make specific disclosures (whistleblowers) about uses of ARRA funds. Any contractor employer receiving ARRA funds must print and post the following poster or a similar notice to employees of section 1553 and shall include the substance of this clause in all subcontracts. http://www.oig.dol.gov/recovery/Section 1553 WhistleblowerProvisions.pdf. Whistleblower information can be found at: http://www.recovery.gov/CONTACT/REPORTFRAUD/Pages/WhistleBlowerInformation.aspx.

SUB-RECIPIENT TERMS

A sub-recipient is a non-federal entity that expends Federal awards received from another entity to carry out a Federal program but does not include an individual who is a beneficiary of such a program. Specifically, sub-recipients are non-Federal entities that are awarded Recovery funding through a legal instrument form the prime recipient to support the performance of any portion of the substantive project or program for which the prime recipient received the Recovery funding. Additionally, the terms and conditions of the Federal award are carried forward to the sub-recipient. Sub-recipient activities will be monitored as necessary to ensure that Federal awards are used for authorized purposes in compliance with laws, regulations, and the provisions of contracts or grant agreements and that performance goals are achieved. Sub-recipients receiving in the aggregate, $500,000 or more in Federal awards during the sub-recipient's fiscal year must meet the audit requirements for that fiscal year, and are subject to the Single Audit. In addition to all of the OMB A-133 requirements, sub-awards made from the federal stimulus funds (ARRA) are subject to Buy-American and compliance with the Davis-Bacon Act of 1931. Under ARRA, these requirements pass through to sub-recipients who may have previously been exempt from compliance.

ADDITIONAL SUB-RECIPIENT REPORTING REQUIREMENTS

In addition to general performance reporting under the Contract, OMB requirements for ARRA transparency and reporting are also passed down to sub-recipients. The City as prime must assure that the following is provided and subsequently recorded in the City's account lines system:

- The DUNS# of the sub-recipient, their legal name, address and type (Prime will obtain from VCUST
- The sub-award number (Prime will obtain from encumbrance document ID)
- The total value of the sub-award contract (Prime will obtain from contract document recorded on the encumbrance)
- The sub-award date (Prime will obtain from date on the encumbrance)
- The sub-award grant period (Prime will obtain from service begin and end dates on the encumbrance)
- The primary performance location/area of benefit (Prime will obtain from the Location Code recorded on the encumbrance and/or payment request transactions)
- Sub-recipients will be required to report all vendor payments they make with ARRA funds. Detail for these payments must include either the payee vendor DUNS number OR the vendor name and the zip code of the vendor headquarters **(Sub-recipient will be notified by Prime on how to report)**
- Sub-recipients must segregate ARRA funds from other sources of funding and shall not co-mingle ARRA funds with other funds or use ARRA funds for any purpose other than for approved ARRA purposes outlined in a contract.
- Sub-recipients may be also required to report the names and total compensation for the five most highly compensated officers in their organization if:
  (1) the recipient in its preceding fiscal year received – (a) 80 percent or more of its annual gross revenues in Federal awards; and (b) $25,000,000 or more in annual gross revenues from Federal awards; and
  (2) the public does not have access to information about the compensation of the senior executives of the entity through periodic reports filed under section 13(a) or 15(d) of the Securities Exchange Act of 1934 (15 U.S.C. 78m(a), 78o(d) or section 6104 of the Internal Revenue Code of 1986 [26 USC § 6104].

  "Total compensation" means the cash and noncash dollar value earned by the executives during the sub-recipient's past fiscal year of the following (for more information see 17 CFR 229.402(c)(2):
  (i). Salary and bonus.
  (ii). Awards of stock, stock options, and stock appreciation rights. Use the dollar amount recognized for financial statement reporting purposes with respect to the fiscal year in accordance with FAS 123R.

(iii). Earnings for services under non-equity incentive plans. Does not include group life, health, hospitalization or medical reimbursement plans that do not discriminate in favor of executives, and are available generally to all salaried employees.
(iv). Change in pension value. This is the change in present value of defined benefit and actuarial pension plans.
(v). Above-market earnings on deferred compensation which are not tax qualified.
(vi). Other compensation. For example, severance, termination payments, value of life insurance paid on behalf of the employee, perquisites or property if the value for the executive exceeds $10,000.

(Sub-recipient will be notified by Prime on how to report on top five highly compensated officers.)

VENDOR TERMS

A Vendor is defined as a dealer, distributor, merchant or other seller providing goods or services that are required for the conduct of a Federal program. Prime recipients or sub-recipients may purchase goods or services needed to carry out the project or program from vendors. Vendors are not awarded funds by the same means as sub-recipients and are not subject to the terms and conditions of the Federal financial assistance award. As outlined above, vendor payments will be reported with the vendor DUNS number OR the vendor name and the zip code of the vendor headquarters. In addition to any other requirements, sub-awards made to vendors from ARRA projects for the construction, alteration, maintenance, or repair of a public building or public work use American iron, steel, and manufactured goods in the project unless one of the specified exemptions applies, in a manner consistent with U.S. obligations under international agreements. Further Section 1606 of the Recovery Act requires compliance with the Davis-Bacon Act of 1931 that all laborers and mechanics employed by contractors and subcontractors on projects funded directly by or assisted in whole or in part with ARRA funds shall be paid wages at rates not less than those prevailing on projects of a character similar in the locality as determined by the Secretary of Labor in accordance with subchapter IV of chapter 31 of title 40, United States Code. These requirements pass through to vendors and their sub-contractors, if any, who may have previously been exempt from compliance.

Please contact your City's Purchasing Department with any question related to performance or compliance.

STANDARD TERMS AND CONDITIONS FOR CONTRACTS AND GRANTS USING ARRA FUNDS

PREAMBLE

To the extent that this contract or grant involves the use of American Recovery and Reinvestment Act of 2009, Pub. L. 111-5 ("ARRA") funds, the following terms and conditions apply.

A "prime recipient" is a non-Federal entity that receives Recovery Act funding as Federal awards in the form of grants, loans, or cooperative agreements directly from the Federal government.

A "sub-recipient" is a non-Federal entity that expends Federal awards received from another entity to carry out a Federal program but does not include an individual who is a beneficiary of such a program.

A "contractor" is defined as a dealer, distributor, merchant, or other seller providing goods or services that are required for the conduct of a Federal program. Prime recipients or sub-recipients may purchase goods or services needed to carry out the project or program from contractors. Contractors are not awarded funds by the same means as sub-recipients and are not subject to the terms and conditions of the Federal financial assistance award.

The contractor or sub-recipient specifically agrees to comply with each of the terms and conditions contained herein.

The contractor or sub-recipient understands and acknowledges that the federal stimulus process is evolving and that new requirements for ARRA compliance may still be forthcoming from the federal government and the City of Cambridge. Accordingly, the sub-recipient/contractor specifically agrees that both it and any sub-grantees/subcontractors will comply with all such requirements during the contract period.

AVAILABILITY OF FUNDING

Contractor/sub-recipient agrees that programs supported with temporary federal funds made available by the American Recovery and Reinvestment Act of 2009, Pub. L. 111-5, will not be continued with state financed appropriations once the temporary federal funds are expended.

BUY AMERICAN REQUIREMENT (IF APPLICABLE)

REQUIRED USE OF AMERICAN IRON, STEEL, AND MANUFACTURED GOODS—SECTION 1605 OF THE AMERICAN RECOVERY AND REINVESTMENT ACT OF 2009

(a) Definitions. As used in this award term and condition—"Manufactured good" means a good brought to the construction site for incorporation into the building or work that has been--(1) Processed into a specific form and shape; or (2) Combined with other raw material to create a material that has different properties than the properties of the individual raw materials.

"Public building" and "public work" means a public building of, and a public work of, a governmental entity (the United States; the District of Columbia; commonwealths, territories, and minor outlying islands of the United States; State and local governments; and multi-State, regional, or interstate entities which have governmental functions). These buildings and works may include, without limitation,

bridges, dams, plants, highways, parkways, streets, subways, tunnels, sewers, mains, power lines, pumping stations, heavy generators, railways, airports, terminals, docks, piers, wharves, ways, lighthouses, buoys, jetties, breakwaters, levees, and canals, and the construction, alteration, maintenance, or repair of such buildings and works.

"Steel" means an alloy that includes at least 50 percent iron, between .02 and 2 percent carbon, and may include other elements.

(b) Domestic preference.

(1) This award term and condition implements Section 1605 of the American Recovery and Reinvestment Act of 2009 (Recovery Act) (Pub. L. 111-5), by requiring that all iron, steel, and manufactured goods used in the project are produced in the United States except as provided in paragraph (b)(3) and (b)(4) of this term and condition.

(2) This requirement does not apply to the material listed by the Federal Government as follows:

(3) The award official may add other iron, steel, and/or manufactured goods to the list in paragraph (b) (2) of this term and condition if the Federal government determines that—

(i) The cost of the domestic iron, steel, and/or manufactured goods would be unreasonable. The cost of domestic iron, steel, or manufactured goods used in the project is unreasonable when the cumulative cost of such material will increase the cost of the overall project by more than 25 percent;

(ii) The iron, steel, and/or manufactured good is not produced, or manufactured in the United States in sufficient and reasonably available quantities and of a satisfactory quality; or

(iii) The application of the restriction of section 1605 of the Recovery Act would be inconsistent with the public interest.

(c) Request for determination of inapplicability of Section 1605 of the Recovery Act.

(1)(i) Any recipient request to use foreign iron, steel, and/or manufactured goods in accordance with paragraph (b) (3) of this term and condition shall include adequate information for Federal Government evaluation of the request, including—

(A) A description of the foreign and domestic iron, steel, and/or manufactured goods;

(B) Unit of measure;

(C) Quantity;

(D) Cost;

(E) Time of delivery or availability;

(F) Location of the project;

(G) Name and address of the proposed supplier; and

(H) A detailed justification of the reason for use of foreign iron, steel, and/or manufactured goods cited in accordance with paragraph (b)(3) of this term and condition.

(ii) A request based on unreasonable cost shall include a reasonable survey of the market and a completed cost comparison table in the format in paragraph (d) of this term and condition.

(iii) The cost of iron, steel, and/or manufactured goods material shall include all delivery costs to the construction site and any applicable duty.

(iv) Any recipient request for a determination submitted after Recovery Act funds have been obligated for a project for construction, alteration, maintenance, or repair shall explain why the recipient could not reasonably foresee the need for such determination and could not have requested the determination before the funds were obligated. If the recipient does not submit a satisfactory explanation, the award official need not make a determination.

(2) If the Federal government determines after funds have been obligated for a project for construction, alteration, maintenance, or repair that an exception to section 1605 of the Recovery Act applies, the award official will amend the award to allow use of the foreign iron, steel, and/or relevant manufactured goods. When the basis for the exception is non-availability or public interest, the amended award shall reflect adjustment of the award amount, redistribution of budgeted funds, and/or other actions taken to cover costs associated with acquiring or using the foreign iron, steel, and/or relevant manufactured goods. When the basis for the exception is the unreasonable cost of the domestic iron, steel, or manufactured goods, the award official shall adjust the award amount or redistribute budgeted funds by at least the differential established in 2 CFR 176.110(a).

(3) Unless the Federal Government determines that an exception to section 1605 of the Recovery Act applies, use of foreign iron, steel, and/or manufactured goods is noncompliant with section 1605 of the American Recovery and Reinvestment Act.

(d) Data. To permit evaluation of requests under paragraph (b) of this term and condition based on unreasonable cost, the Recipient shall include the following information and any applicable supporting data based on the survey of suppliers:

FOREIGN AND DOMESTIC ITEMS COST COMPARISON

Description	Unit of Measure	Quantity	Price (Dollars)*
Item 1:			
Foreign steel, iron, or manufactured good	_____	_____	_____
Domestic steel, iron, or manufactured good	_____	_____	_____
Item 2:			

Foreign steel, iron, or manufactured good _____ _____ _____

Domestic steel, iron, or manufactured good _____ _____ _____

[List name, address, telephone number, email address, and contact for suppliers surveyed.

Attach copy of response; if oral, attach summary.]

[Include other applicable supporting information.]

[* *Include all delivery costs to the construction site.]*

CONFLICTING REQUIREMENTS

Contractor/sub-recipient agrees that, to the extent ARRA requirements conflict with City of Cambridge requirements, the ARRA requirements shall control.

FALSE CLAIMS ACT

Contractor/sub-recipient agrees that it shall promptly refer to an appropriate federal inspector general any credible evidence that a principal, employee, agent, subgrantee, subcontractor or other person has committed a false claim under the False Claims Act or has committed a criminal or civil violation of laws pertaining to fraud, conflict of interest, bribery, gratuity, or similar misconduct involving those funds.

ENFORCEABILITY

Contractor/sub-recipient agrees that if the contractor/sub-recipient or one of its subcontractors/sub-grantees fails to comply with all applicable federal and state requirements governing the use of ARRA funds, the City of Cambridge may withhold or suspend, in whole or in part, funds awarded under the program, or recover misspent funds following an audit. This provision is in addition to all other remedies available to the City of Cambridge under all applicable state and federal laws.

INSPECTION OF RECORDS

Contractor/sub-recipient agrees that it shall permit the United States Comptroller General or his representative or the appropriate inspector general appointed under section 3 or 8G of the Inspector General Act of 1978 or his representative to: (1) examine any records that directly pertain to, and involve transactions relating to, this contract; and (2) interview any officer or employee of contractor/sub-recipient or any of its subcontractors/sub-grantees regarding the Activities funded with funds appropriated or otherwise made available by the ARRA.

SEC. 902. ACCESS OF GOVERNMENT ACCOUNTABILITY OFFICE.

(a) ACCESS.—Each contract awarded using funds made available in this Act shall provide that the Comptroller General and his representatives are authorized—(1) to examine any records of the contractor or any of its subcontractors, or any State or local agency administering such contract, that

directly pertain to, and involve transactions relating to, the contract or subcontract; and (2) to interview any officer or employee of the contractor or any of its subcontractors, or of any State or local government agency administering the contract, regarding such transactions.

(b) RELATIONSHIP TO EXISTING AUTHORITY.—Nothing in this section shall be interpreted to limit or restrict in any way any existing authority of the Comptroller General.

SEC. 1514. INSPECTOR GENERAL REVIEWS.

(a) REVIEWS.—Any inspector general of a Federal department or executive agency shall review, as appropriate, any concerns raised by the public about specific investments using funds made available in this Act. Any findings of such reviews not related to an ongoing criminal proceeding shall be relayed immediately to the head of the department or agency concerned. In addition, the findings of such reviews, along with any audits conducted by any inspector general of funds made available in this Act, shall be posted on the inspector general's website and linked to the website established by section 1526, except that portions of reports may be redacted to the extent the portions would disclose information that is protected from public disclosure under sections 552 and 552a of title 5, United States Code.

SEC. 1515. ACCESS OF OFFICES OF INSPECTOR GENERAL TO CERTAIN

RECORDS AND EMPLOYEES

(a) ACCESS.—With respect to each contract or grant awarded using covered funds, any representative of an appropriate inspector general appointed under section 3 or 8G of the Inspector General Act of 1978 (5 U.S.C. App.), is authorized—

(1) to examine any records of the contractor or grantee, any of its subcontractors or sub-grantees, or any State or local agency administering such contract, that pertain to, and involve transactions relating to, the contract, subcontract, grant, or subgrant; and

(2) to interview any officer or employee of the contractor, grantee, subgrantee, or agency regarding such transactions.

(b) RELATIONSHIP TO EXISTING AUTHORITY.—Nothing in this section shall be interpreted to limit or restrict in any way any existing authority of an inspector general.

CIVIL RIGHTS OBLIGATIONS

Recipients, sub-recipients and contractors receiving ARRA funds or other Federal financial assistance must comply with Title VI of the Civil Rights Act of 1964 (prohibiting race, color, and national origin discrimination), Section 504 of the Rehabilitation Act of 1973 (prohibiting disability discrimination), Title IX of the Education Amendments of 1972 (prohibiting sex discrimination in education and training programs), and the Age Discrimination Act of 1975 (prohibiting age discrimination in the provision of services). For further information and technical assistance, please contact the HHS Office for Civil Rights at (202) 619-0403, OCRmail@hhs.gov, or **http://www.hud.gov/ocr/civilrights/**

PROHIBITION ON USE OF ARRA FUNDS

Contractor/sub-recipient agrees that none of the funds made available under this contract may be used for any casino or other gambling establishment, aquarium, zoo, golf course, swimming pools, or similar projects.

REPORTING REQUIREMENTS

Pursuant to Section 1512 of the ARRA, entities (The City of Cambridge) receiving ARRA funds must submit reports to the federal government no later than ten (10) calendar days after the end of each calendar quarter. This report must contain the information outlined below.

Contractor/Sub-recipient will be required to submit reports on a monthly basis to the City of Cambridge no later than five days after the close of each month throughout the duration of the contract period.

Accordingly, each sub-recipient agrees to provide the City of Cambridge with the following information in a timely manner:

Sub-recipient's DUNS number;

Award number or other identifying number assigned by the prime recipient;

The total amount of ARRA funds received by sub-recipient during the reporting period;

The amount of ARRA funds that were expended or obligated during the reporting period;

A detailed list of all projects or activities for which ARRA funds were expended or obligated, including:

the name of the project or activity; a description of the project or activity; an evaluation of the completion status of the project or activity; and

an estimate of the number of jobs created and the number of jobs retained by the project or activity;

the primary place of performance of the subaward, including the city, state, congressional district and country;

The names and total compensation of the five most highly compensated officers of the company if it received: 1) 80% or more of its annual gross revenues in Federal awards; and 2) $25M or more in annual gross revenue from Federal awards.

Any other information reasonably requested by the Commonwealth or required by state or federal law or regulation.

Each contractor must supply their DUNS number and an estimate of the number of jobs created and number of jobs retained as a result of the award of ARRA funds.

OMB Memorandum M-09-21 dated June 22, 2009 outlines the standard data elements and federal implementation guidance for use in complying with the reporting requirements under Section 1512 of the ARRA. http://www.whitehouse.gov/omb/assets/memoranda_fy2009/m09-21.pdf

SEGREGATION OF FUNDS

Contractor/sub-recipient agrees that it shall segregate obligations and expenditures of Recovery Act funds from other funding. No part of funds made available under the American Recovery and Reinvestment Act of 2009, Pub. L. 111-5, may be comingled with any other funds or used for a purpose other than that of making payments for costs allowable under the ARRA.

SUBCONTRACTOR/SUBGRANTEE REQUIREMENTS

Contractor/sub-recipient agrees that it shall include these standard terms and conditions, including this requirement, in any of its subcontracts or subgrants in connection with projects funded in whole or in part with funds available under the American Recovery and Reinvestment Act of 2009, Pub. L. 111-5.

WAGE REQUIREMENTS (IF APPLICABLE)

Contractor/sub-recipient agrees that, in accordance with Section 1606 of the ARRA, both it and its subcontractors shall fully comply with this section in that, notwithstanding any other provision of law, and in a manner consistent with the other provisions of the ARRA, all laborers and mechanics employed by contractors and subcontractors on projects funded in whole or in part with funds available under the ARRA shall be paid wages at rates not less than those prevailing on projects of a character similar in the locality, as determined by the United States Secretary of Labor in accordance with subchapter IV of chapter 31 of title 40 of the United States Code. The Secretary of Labor's determination regarding the prevailing wages applicable in the City of Cambridge are located at: http://www.gpo.gov/davisbacon/ma.html

Pursuant to Reorganization Plan No. 14 and the Copeland Act, 40 U.S.C. 3145, the Department of Labor has issued regulations at 29 CFR Parts 1, 3, and 5 to implement the Davis-Bacon and related Acts. Regulations in 29 CFR 5.5 instruct agencies concerning application of the standard Davis-Bacon contract clauses set forth in that section. Federal agencies providing grants, cooperative agreements, and loans under the Recovery Act shall ensure that the standard Davis-Bacon contract clauses found in 29 CFR 5.5

(a) are incorporated in any resultant covered contracts that are in excess of $2,000 for construction, alteration or repair (including painting and decorating).

(b) Awarding agency. Recipients of grants, cooperative agreements and loans should direct their initial inquiries concerning the application of Davis-Bacon requirements to a particular federally assisted project to the Federal agency funding the project. The Secretary of Labor retains final coverage) for additional guidance on the wage rate requirements of section 1606, contact your authority under Reorganization Plan Number 14.

WHISTLEBLOWER PROTECTION

Contractor/sub-recipient agrees that both it and its subcontractors/sub-grantees shall comply with Section 1553 of the ARRA, which prohibits all non-federal Contractor/sub-recipients of ARRA funds, including the City of Cambridge, and all contractors and grantees of the City of Cambridge, from discharging, demoting or otherwise discriminating against an employee for disclosures by the employee that the employee reasonably believes are evidence of (1) gross mismanagement of a contract or grant relating to ARRA funds; (2) a gross waste of ARRA funds; (3) a substantial and specific danger to public health or safety related to the implementation or use of ARRA funds; (4) an abuse of authority related to

implementation or use of ARRA funds; or (5) a violation of law, rule, or regulation related to an agency contract (including the competition for or negotiation of a contract) or grant, awarded or issued relating to ARRA funds. Contractor/sub-recipient agrees that it and its subcontractors/sub-grantees shall post notice of the rights and remedies available to employees under Section 1553 of Title XV of Division A of the ARRA.