City of Cambridge

PURCHASING DEPARTMENT

795 Massachusetts Ave. • Cambridge, Massachusetts 02139-3219

Amy L. Witts
Purchasing Agent

TO: **All Bidders**

FROM: **City of Cambridge**

DATE: **March 11, 2016**

RE: **File No. 7132 –Pumping System Improvements at the Walter J. Sullivan Water Purification Facility- Addendum No. 4**

This addendum is comprised of:

1. **Painting filed sub-bid tabulation sheet**
2. **Questions and Answers**
3. **Technical Specification and Drawing Revisions**

All other details remain the same.

Amy L. Witts

Amy L. Witts
Purchasing Agent

Addendum No. 4

00007132 - Pumping System Improvements at the Walter J. Sullivan Water Purification Facility **03/31/2016**

PAINTING

Name of Bidder	Base Value	Alt No. 1	Alt No. 2	Alt No. 3	Alt No. 4
Keltic Painting LLC 189 Hill Road Thompson, CT 06277 Addendums: Comments:	$50,990.00	$4,200.00	$0.00	$0.00	$0.00
John W. Egan Co. Inc 3 Border Street West Newton, MA 02465 Addendums: Comments:	$51,200.00	$0.00	$0.00	$0.00	$0.00
SOEP Painting Corp 156 Ballard Street Lawrence, MA 01843 Addendums: Comments:	$64,950.00	$0.00	$0.00	$0.00	$0.00
R.J. Forbes painting contractor Inc. 228 O'Neil Blvd. Attleboro, MA 02703 Addendums: Comments:	$87,150.00	$0.00	$0.00	$0.00	$0.00

Responses to Questions and
Technical Specification Revisions

File No. 7132
Pumping System Improvements at the Walter J. Sullivan Water Purification Facility
City of Cambridge, Massachusetts

Prepared by CDM Smith Inc.
March 11, 2016

CONTRACTOR QUESTIONS

Text shown in "italics" indicates question asked. Bold text shown immediately following indicates the response to the question asked.

1. *NEC/Emerson Process Mgt would like to propose an EQUAL system for the Pump and Motor Vibration Monitoring System called out in the subject project. Section 40 77 19 – 3. Are low frequency (100-300 RPM) Velomitor CT transducers, 100 mV/in/sec, required, or can 100 mV/g accelerometers which accommodate a broader frequency range be used?*

   The vibration sensors required by Section 40 77 19 are required to reduce signal interference relative to other signals and speed of the specified motors.

2. *What is the required NEMA rating for the "Pump control valve and emergency control valve control panel" enclosure shown on drawing MP-504?*

   The pump control valve and emergency control valve control panels must meet the NEMA 12 rating. See addendum to technical specifications below.

3. *Are all of the manifolds for each butterfly valve located in the above enclosure on drawing MP-504?*

   The control manifolds for each butterfly valve are located in independent enclosures, which are schematically shown on sheets MP-502 and MP-503 and located spatially on sheet MP-103, meaning that five butterfly valves have five enclosures. These five enclosures are independent of the enclosure required for the hydraulic power unit.

4. *The existing FW Pump discharge piping has pipe insulation with a metal jacket. Will the new discharge pipe and valves require insulation with metal jacket? If required please provide pipe insulation specification.*

   Section 23 07 00 – Thermal Insulation has been added as part of this addendum (see below).

5. *F.S. Electrical Specification Field Commissioning Section 26 07 10, Part 3.02 Item D.6, reads "Perform field testing required in Section 40 05 93.10". Does F.S. Electrical scope responsible for work specified in Section 40 05 93.10?*

Section 40 05 93.10 is the responsibility of the General Contractor, <u>not</u> the electrical filed sub-bidder. See addendum to technical specifications below.

<u>TECHNCAL SPECIFICATIONS</u>

1. Add Section 23 07 00 – Thermal Insulation to the Specifications (attached consisting of 6 pages).

2. In Section 26 02 00 – Electrical, **ADD** the following after Paragraph 1.07.A.3:

   "4. NEMA 12 for the Pump Room."

3. In Section 26 07 10 – Form-Wound Induction Motors 250 hp and Above, **DELETE** Paragraph 3.02.D.6.

4. In Section 40 90 00—Instrumentation and Controls – General Provisions, **ADD** the following after Paragraph 2.03.E.3, and renumber subsequent paragraphs 2.04, 2.05, and 2.06 to 2.05, 2.06, and 2.07, respectively:

   "2.04 PRESSURE GAUGE

   A. Pressure gauges furnished under this section shall comply with the same specification requirements in Section 40 97 15.10, Paragraph 2.01."

5. In Section 40 90 00—Instrumentation and Controls – General Provisions, **DELETE** the second sentence in parentheses in Paragraph 2.05.A (formerly 2.04.A) in its entirety.

6. In Section 40 90 00—Instrumentation and Controls – General Provisions, **ADD** the following after Paragraph 2.05.A.4 (formerly 2.04.A.4):

   "B. Modifications to the input/output (I/O) of the existing LCP-1 (Raw Water) and LCP-2 (Finished Water) control panels are detailed in Appendix A of this Section. Each I/O point has the following status under this work:

   1-Existing I/O. No change as part of the work.

   2-New Module and I/O. New I/O modules required as part of the work to be furnished and installed in the specified slot. New wiring and terminal blocks matching the existing work shall be provided for the I/O of a new module, including all spare points.

   3-Redefined Existing I/O. Existing field terminations shall be removed and replaced with new field signals as specified."

7. In Section 40 90 00—Instrumentation and Controls – General Provisions, **ADD** the following Appendix A—I/O List (consisting of nine pages) to the end of the Section:

Panel	Type	Elec	Relay	PLC Addr.	Prefix	Tag#	Suffix	Description	Range Function	Status: 1:Existing I/O 2:New Module & I/O 3:Redefined Existing I/O
LCP-1	AI	1-5vdc	--	R1/G0/CH1	FIT	101		Stony Brook Overflow To Fresh Pond	0 to 30 MGD	1
LCP-1	AI	1-5vdc	--	R1/G0/CH2	LIT	103		Fresh Pond Water Level	0 TO 20 FT.	1
LCP-1	AI	1-5vdc	--	R1/G0/CH3	TIT	105		Raw Water Temperature	30 to 100 Deg F	1
LCP-1	AI	1-5vdc	--	R1/G0/CH4	AIT	106		Raw Water Turbidity	0 to 100 NTU	1
LCP-1	AI	1-5vdc	--	R1/G0/CH5	AIT	107		Raw Water PH	0 to 14 PH	1
LCP-1	AI	1-5vdc	--	R1/G0/CH6	FIT	112	1	Raw Water Flow Control Valve No. 1 **Flow**	0-24 MGD	1
LCP-1	AI	1-5vdc	--	R1/G0/CH7	**SIT**	**111**	**1**	**Raw Water Pump No. 1 Speed**	**0-100%**	**3**
LCP-1	AI	1-5vdc	--	R1/G0/CH8	**SIT**	**111**	**2**	**Raw Water Pump No. 2 Speed**	**0-100%**	**3**
LCP-1	AI	1-5vdc	--	R1/G2/CH1	AIT	108		Raw Water Manganese	0-1 PPM	1
LCP-1	AI	1-5vdc	--	R1/G2/CH2	AIT	109		Raw Water Particle Count	0-20,000 Particles/mL	1
LCP-1	AI	1-5vdc	--	R1/G2/CH3	LIT	110		Suction Well Level	0 TO 20 FT.	1
LCP-1	AI	1-5vdc	--	R1/G2/CH4	FIT	112	2	Raw Water Flow Control Valve No. 2	0-24 MGD	1
LCP-1	AI	1-5vdc	--	R1/G2/CH5	**SIT**	**111**	**3**	**Raw Water Pump No. 3 Speed**	**0-100%**	**3**
LCP-1	AI	1-5vdc	--	R1/G2/CH6	**SIT**	**111**	**4**	**Raw Water Pump No. 4 Speed**	**0-100%**	**3**
LCP-1	AI	1-5vdc	--	R1/G2/CH7	**PIT**	**111**	**1**	**Raw Water Pump No. 1 Discharge Pressure**	**0-100 PSI**	**3**
LCP-1	AI	1-5vdc	--	R1/G2/CH8	**PIT**	**111**	**2**	**Raw Water Pump No. 2 Discharge Pressure**	**0-100 PSI**	**3**
LCP-1	**AI**	**1-5vdc**	**--**	**R1/G4/CH1**	**PIT**	**111**	**3**	**Raw Water Pump No. 3 Discharge Pressure**	**0-100 PSI**	**2 (SLOT 3)**
LCP-1	**AI**	**1-5vdc**	**--**	**R1/G4/CH2**	**PIT**	**111**	**4**	**Raw Water Pump No. 4 Discharge Pressure**	**0-100 PSI**	**2 (SLOT 3)**
LCP-1	**AI**	**1-5vdc**	**--**	**R1/G4/CH3**				**Spare**		**2 (SLOT 3)**
LCP-1	**AI**	**1-5vdc**	**--**	**R1/G4/CH4**				**Spare**		**2 (SLOT 3)**
LCP-1	**AI**	**1-5vdc**	**--**	**R1/G4/CH5**				**Spare**		**2 (SLOT 3)**
LCP-1	**AI**	**1-5vdc**	**--**	**R1/G4/CH6**				**Spare**		**2 (SLOT 3)**
LCP-1	**AI**	**1-5vdc**	**--**	**R1/G4/CH7**				**Spare**		**2 (SLOT 3)**
LCP-1	**AI**	**1-5vdc**	**--**	**R1/G4/CH8**				**Spare**		**2 (SLOT 3)**
LCP-1	AO	4-20ma	--	R1/G6/CH1	FI	100		Stony Brook To Fresh Pond	0 to 40 MGD	1
LCP-1	AO	4-20ma	--	R1/G6/CH2	ZC	112	1	Raw Water Flow Control Valve No. 1	0-100 %	1
LCP-1	AO	4-20ma	--	R1/G6/CH3	**SC**	**111**	**1**	**Raw Water Pump No. 1 Speed Command**	**0-100%**	**3**
LCP-1	AO	4-20ma	--	R1/G6/CH4	**SC**	**111**	**1**	**Raw Water Pump No. 2 Speed Command**	**0-100%**	**3**
LCP-1	AO	4-20ma	--	R2/G0/CH1	ZC	112	2	Raw Water Flow Control Valve No. 2	0-100 %	1
LCP-1	AO	4-20ma	--	R2/G0/CH2	**SC**	**111**	**1**	**Raw Water Pump No. 3 Speed Command**	**0-100%**	**3**
LCP-1	AO	4-20ma	--	R2/G0/CH3	**SC**	**111**	**1**	**Raw Water Pump No. 4 Speed Command**	**0-100%**	**3**
LCP-1	AO	4-20ma	--	R2/G0/CH4				Spare		1
LCP-1	DI	120ac	--	I:022/00	HS	900	1A	Annunciator Remote Acknowledge and Silence	Ack Alarm	1
LCP-1	DI	120ac	--	I:022/01	MCC	111	1	Fresh Pond - Raw Water Pump No.1 Control	Running	1
LCP-1	DI	120ac	--	I:022/02	MCC	111	2	Fresh Pond - Raw Water Pump No.2 Control	Running	1
LCP-1	DI	120ac	--	I:022/03	MCC	111	1	Fresh Pond - Raw Water Pump No.1 Control	Failure (OL)	1
LCP-1	DI	120ac	--	I:022/04	MCC	111	2	Fresh Pond - Raw Water Pump No.2 Control	Failure (OL)	1
LCP-1	DI	120ac	--	I:022/05	**XA**	**111**	**1**	**Raw Water Pump No. 1 VFD**	**Fault**	**3**
LCP-1	DI	120ac	--	I:022/06	**HS**	**111**	**1**	**Raw Water Pump No. 1 VFD**	**E-Stop**	**3**
LCP-1	DI	120ac	--	I:022/07	**XA**	**111**	**2**	**Raw Water Pump No. 2 VFD**	**Fault**	**3**

Panel	Type	Elec	Relay	PLC Addr.	Prefix	Tag#	Suffix	Description	Range Function	Status: 1:Existing I/O 2:New Module & I/O 3:Redefined Existing I/O
LCP-1	DI	120ac	--	I:022/10	**HS**	**111**	**2**	**Raw Water Pump No. 2 VFD**	**E-Stop**	**3**
LCP-1	DI	120ac	--	I:022/11	HS	111	1	Fresh Pond - Raw Water Pump No.1 Control	Remote	1
LCP-1	DI	120ac	--	I:022/12	HS	111	2	Fresh Pond - Raw Water Pump No.2 Control	Remote	1
LCP-1	DI	120ac	--	I:022/13	**XA**	**111**	**3**	**Raw Water Pump No. 3 VFD**	**Fault**	**3**
LCP-1	DI	120ac	--	I:022/14	**HS**	**111**	**3**	**Raw Water Pump No. 3 VFD**	**E-Stop**	**3**
LCP-1	DI	120ac	--	I:022/15	CR	1		DC Power Supply 1 (Not) Failure	Alarm	1
LCP-1	DI	120ac	--	I:022/16	CR	2		DC Power Supply 2 (Not) Failure	Alarm	1
LCP-1	DI	120ac	--	I:022/17				Control Power On	Status	1
LCP-1	DI	120ac	--	I:024/00	HS	900	1B	Annunciator Remote Acknowledge and Silence		1
LCP-1	DI	120ac	--	I:024/01	MCC	111	3	Fresh Pond - Raw Water Pump No.3 Control	Running	1
LCP-1	DI	120ac	--	I:024/02	MCC	111	4	Fresh Pond - Raw Water Pump No.4 Control	Running	1
LCP-1	DI	120ac	--	I:024/03	MCC	111	3	Fresh Pond - Raw Water Pump No.3 Control	Failure (OL)	1
LCP-1	DI	120ac	--	I:024/04	MCC	111	4	Fresh Pond - Raw Water Pump No.4 Control	Failure (OL)	1
LCP-1	DI	120ac	--	I:024/05	**XA**	**111**	**4**	**Raw Water Pump No. 4 VFD**	**Fault**	**3**
LCP-1	DI	120ac	--	I:024/06	**HS**	**111**	**4**	**Raw Water Pump No. 4 VFD**	**E-Stop**	**3**
LCP-1	DI	120ac	--	I:024/07				**Spare**		**3**
LCP-1	DI	120ac	--	I:024/10				**Spare**		**3**
LCP-1	DI	120ac	--	I:024/11	HS	111	3	Fresh Pond - Raw Water Pump No.3 Control	Remote	1
LCP-1	DI	120ac	--	I:024/12	HS	111	4	Fresh Pond - Raw Water Pump No.4 Control	Remote	1
LCP-1	DI	120ac	--	I:024/13				Spare		1
LCP-1	DI	120ac	--	I:024/14				Spare		1
LCP-1	DI	120ac	--	I:024/15	**VXH**	**111**	**1**	**Raw Water Pump No. 1 Vibration**	**Warning**	**3**
LCP-1	DI	120ac	--	I:024/16	**VXHH**	**111**	**1**	**Raw Water Pump No. 1 Vibration**	**Shutdown**	**3**
LCP-1	DI	120ac	--	I:024/17	**VXH**	**111**	**2**	**Raw Water Pump No. 2 Vibration**	**Warning**	**3**
LCP-1	DI	120ac	--	I:026/00	**VXHH**	**111**	**2**	**Raw Water Pump No. 2 Vibration**	**Shutdown**	**3**
LCP-1	DI	120ac	--	I:026/01	**VXH**	**111**	**3**	**Raw Water Pump No. 3 Vibration**	**Warning**	**3**
LCP-1	DI	120ac	--	I:026/02	**VXHH**	**111**	**3**	**Raw Water Pump No. 3 Vibration**	**Shutdown**	**3**
LCP-1	DI	120ac	--	I:026/03	**VXH**	**111**	**4**	**Raw Water Pump No. 4 Vibration**	**Warning**	**3**
LCP-1	DI	120ac	--	I:026/04	**VXHH**	**111**	**4**	**Raw Water Pump No. 4 Vibration**	**Shutdown**	**3**
LCP-1	DI	120ac	--	I:026/05	**ZSC**	**111**	**1**	**Raw Water Pump No. 1 Check Valve**	**Closed**	**3**
LCP-1	DI	120ac	--	I:026/06	**ZSC**	**111**	**2**	**Raw Water Pump No. 2 Check Valve**	**Closed**	**3**
LCP-1	DI	120ac	--	I:026/07	**ZSC**	**111**	**3**	**Raw Water Pump No. 3 Check Valve**	**Closed**	**3**
LCP-1	DI	120ac	--	I:026/10	**ZSC**	**111**	**4**	**Raw Water Pump No. 4 Check Valve**	**Closed**	**3**
LCP-1	DI	120ac	--	I:026/11	**ZSO**	**112**	**1**	**Raw Water Train No. 1 Valve**	**Open**	**3**
LCP-1	DI	120ac	--	I:026/12	**ZSC**	**112**	**1**	**Raw Water Train No. 1 Valve**	**Closed**	**3**
LCP-1	DI	120ac	--	I:026/13	**HS**	**112**	**1**	**Raw Water Train No. 1 Valve**	**Remote**	**3**
LCP-1	DI	120ac	--	I:026/14	**ZSO**	**112**	**2**	**Raw Water Train No. 2 Valve**	**Open**	**3**
LCP-1	DI	120ac	--	I:026/15	**ZSC**	**112**	**2**	**Raw Water Train No. 2 Valve**	**Closed**	**3**
LCP-1	DI	120ac	--	I:026/16	**HS**	**112**	**2**	**Raw Water Train No. 2 Valve**	**Remote**	**3**
LCP-1	DI	120ac	--	I:026/17	**HS**	**111**		**Common Emergency Stop**	**E-Stop**	**3**

Panel	Type	Elec	Relay	PLC Addr.	Prefix	Tag#	Suffix	Description	Range Function	Status: 1:Existing I/O 2:New Module & I/O 3:Redefined Existing I/O
LCP-1	DO	120ac	Y	O:030/00	MCC	111	1	Fresh Pond - Raw Water Pump No.1 Control	Run	1
LCP-1	DO	120ac	Y	O:030/01	MCC	111	2	Fresh Pond - Raw Water Pump No.2 Control	Run	1
LCP-1	DO	120ac	Y	O:030/02	MCC	111	3	Fresh Pond - Raw Water Pump No.3 Control	Run	1
LCP-1	DO	120ac	Y	O:030/03	MCC	111	4	Fresh Pond - Raw Water Pump No.4 Control	Run	1
LCP-1	DO	120ac	Y	O:030/04				Spare		1
LCP-1	DO	120ac	Y	O:030/05				Spare		1
LCP-1	DO	120ac	Y	O:030/06				Spare		1
LCP-1	DO	120ac	Y	O:030/07				Spare		1
LCP-1	DO	120ac	Y	O:030/10				Spare		1
LCP-1	DO	120ac	Y	O:030/11				Spare		1
LCP-1	DO	120ac	Y	O:030/12				Spare		1
LCP-1	DO	120ac	Y	O:030/13				Spare		1
LCP-1	DO	120ac	Y	O:030/14				Spare		1
LCP-1	DO	120ac	Y	O:030/15				Spare		1
LCP-1	DO	120ac	Y	O:030/16				Spare		1
LCP-1	DO	120ac	Y	O:030/17				Spare		1
LCP-1	DO	24ac	N	O:034/00	LAHH	103	A	Fresh Pond Water Level High/High Alarm	Set at 18.5 Ft.	1
LCP-1	DO	24ac	N	O:034/01	LAL	103	A	Fresh Pond Water Level Low Alarm	Set at 12.5 Ft.	1
LCP-1	DO	24ac	N	O:034/02	LAH	103	A	Fresh Pond Water Level High Alarm	Set at 17.5 Ft.	1
LCP-1	DO	24ac	N	O:034/03	AAH	106	A	Raw Water Turbidity High Alarm	Set at 2.0 NTU	1
LCP-1	DO	24ac	N	O:034/04	AAH	107	A	Raw Water pH High Alarm	Set at 7.5	1
LCP-1	DO	24ac	N	O:034/05	AAL	107	A	Raw Water pH Low Alarm	Set at 6.5	1
LCP-1	DO	24ac	N	O:034/06	AAH	108	A	Raw Water Manganese High Alarm	0 to 1 PPM	1
LCP-1	DO	24ac	N	O:034/07	LALL	110	A	Suction Well Level Low/Low Alarm	Set 12.0 Ft.	1
LCP-1	DO	24ac	N	O:034/10	LAH	110	A	Suction Well Level High Alarm	Set 17.5 Ft.	1
LCP-1	DO	24ac	N	O:034/11	LAL	110	A	Suction Well Level Low Alarm	Set 12.5 Ft.	1
LCP-1	DO	24ac	N	O:034/12				**Spare**		**3**
LCP-1	DO	24ac	N	O:034/13				**Spare**		**3**
LCP-1	DO	24ac	N	O:034/14				**Spare**		**3**
LCP-1	DO	24ac	N	O:034/15				**Spare**		**3**
LCP-1	DO	24ac	N	O:034/16	XA	1		DC Power Supply 1 Failure	Alarm	1
LCP-1	DO	24ac	N	O:034/17	XA	2		DC Power Supply 2 Failure	Alarm	1
LCP-1	DO	24ac	N	O:036/00	XA			PLC Trouble	Alarm	1
LCP-1	DO	24ac	N	O:036/01				Spare		1
LCP-1	DO	24ac	N	O:036/02				Spare		1
LCP-1	DO	24ac	N	O:036/03				Spare		1
LCP-1	DO	24ac	N	O:036/04				Spare		1
LCP-1	DO	24ac	N	O:036/05				Spare		1
LCP-1	DO	24ac	N	O:036/06				Spare		1
LCP-1	DO	24ac	N	O:036/07				Spare		1

Panel	Type	Elec	Relay	PLC Addr.	Prefix	Tag#	Suffix	Description	Range Function	Status: 1:Existing I/O 2:New Module & I/O 3:Redefined Existing I/O
LCP-1	DO	24ac	N	O:036/10				Spare		1
LCP-1	DO	24ac	N	O:036/11				Spare		1
LCP-1	DO	24ac	N	O:036/12				Spare		1
LCP-1	DO	24ac	N	O:036/13				Spare		1
LCP-1	DO	24ac	N	O:036/14				Spare		1
LCP-1	DO	24ac	N	O:036/15				Spare		1
LCP-1	DO	24ac	N	O:036/16				Spare		1
LCP-1	DO	24ac	N	O:036/17				Spare		1
LCP-2	DI	120ac	--	I:010/00	SI	511	1	Finished Water Pump No. 1	Running	1
LCP-2	DI	120ac	--	I:010/01	SI	511	2	Finished Water Pump No. 2	Running	1
LCP-2	DI	120ac	--	I:010/02	SI	511	1	Finished Water Pump No. 1	Failure	1
LCP-2	DI	120ac	--	I:010/03	SI	511	2	Finished Water Pump No. 2	Failure	1
LCP-2	DI	120ac	--	I:010/04	**ZSC**	**511**	**1**	**Finished Water Pump No. 1 Discharge Valve**	**Close**	**3**
LCP-2	DI	120ac	--	I:010/05	**ZSC**	**511**	**2**	**Finished Water Pump No. 2 Discharge Valve**	**Close**	**3**
LCP-2	DI	120ac	--	I:010/06	**ZSO**	**511**	**1**	**Finished Water Pump No. 1 Discharge Valve**	**Open**	**3**
LCP-2	DI	120ac	--	I:010/07	**ZSO**	**511**	**2**	**Finished Water Pump No. 2 Discharge Valve**	**Open**	**3**
LCP-2	DI	120ac	--	I:010/10	**XS**	**511**	**1**	**Finished Water Pump No. 1 Discharge Valve**	**Fault/Disagreement**	**3**
LCP-2	DI	120ac	--	I:010/11	**XS**	**511**	**2**	**Finished Water Pump No. 2 Discharge Valve**	**Fault/Disagreement**	**3**
LCP-2	DI	120ac	--	I:010/12	**SIK**	**511**	**1**	**Finished Water Pump No. 1 VFD**	**Fault**	**3**
LCP-2	DI	120ac	--	I:010/13	**SIK**	**511**	**2**	**Finished Water Pump No. 2 VFD**	**Fault**	**3**
LCP-2	DI	120ac	--	I:010/14	HS	511	1A	Finished Water Pump No. 1	Remote	1
LCP-2	DI	120ac	--	I:010/15	HS	511	2A	Finished Water Pump No. 2	Remote	1
LCP-2	DI	120ac	--	I:010/16	**YS**	**511**	**1**	**Finished Water Pump No. 1 Valve Hydraulic System**	**Running**	**3**
LCP-2	DI	120ac	--	I:010/17	**PN**	**511**	**1**	**Finished Water Pump No. 1 Valve Hydraulic System**	**At Pressure**	**3**
LCP-2	DI	120ac	--	I:012/00	SI	511	3	Finished Water Pump No. 3	Running	1
LCP-2	DI	120ac	--	I:012/01	SI	511	4	Finished Water Pump No. 4	Running	1
LCP-2	DI	120ac	--	I:012/02	SI	511	3	Finished Water Pump No. 3	Failure	1
LCP-2	DI	120ac	--	I:012/03	SI	511	4	Finished Water Pump No. 4	Failure	1
LCP-2	DI	120ac	--	I:012/04	**ZSC**	**511**	**3**	**Finished Water Pump No. 3 Discharge Valve**	**Close**	**3**
LCP-2	DI	120ac	--	I:012/05	**ZSC**	**511**	**4**	**Finished Water Pump No. 4 Discharge Valve**	**Close**	**3**
LCP-2	DI	120ac	--	I:012/06	**ZSO**	**511**	**3**	**Finished Water Pump No. 3 Discharge Valve**	**Open**	**3**
LCP-2	DI	120ac	--	I:012/07	**ZSO**	**511**	**4**	**Finished Water Pump No. 4 Discharge Valve**	**Open**	**3**
LCP-2	DI	120ac	--	I:012/10	**XS**	**511**	**3**	**Finished Water Pump No. 3 Discharge Valve**	**Fault/Disagreement**	**3**
LCP-2	DI	120ac	--	I:012/11	**XS**	**511**	**4**	**Finished Water Pump No. 4 Discharge Valve**	**Fault/Disagreement**	**3**
LCP-2	DI	120ac	--	I:012/12	**SIK**	**511**	**3**	**Finished Water Pump No. 3 VFD**	**Fault**	**3**
LCP-2	DI	120ac	--	I:012/13	**SIK**	**511**	**4**	**Finished Water Pump No. 4 VFD**	**Fault**	**3**
LCP-2	DI	120ac	--	I:012/14	HS	511	3A	Finished Water Pump No. 3	Remote	1
LCP-2	DI	120ac	--	I:012/15	HS	511	4A	Finished Water Pump No. 4	Remote	1
LCP-2	DI	120ac	--	I:012/16	**YS**	**511**	**2**	**Finished Water Pump No. 2 Valve Hydraulic System**	**Running**	**3**
LCP-2	DI	120ac	--	I:012/17	**PN**	**511**	**2**	**Finished Water Pump No. 2 Valve Hydraulic System**	**At Pressure**	**3**

Panel	Type	Elec	Relay	PLC Addr.	Prefix	Tag#	Suffix	Description	Range Function	Status: 1:Existing I/O 2:New Module & I/O 3:Redefined Existing I/O
LCP-2	DI	120ac	--	I:014/00	HS	522	1	Payson Park Reservoir No. 1 Level	North	1
LCP-2	DI	120ac	--	I:014/01	HS	522	2	Payson Park Reservoir No. 2 Level	North	1
LCP-2	DI	120ac	--	I:014/02	HS	522	1	Payson Park Reservoir No. 1 Level	South	1
LCP-2	DI	120ac	--	I:014/03	HS	522	2	Payson Park Reservoir No. 2 Level	South	1
LCP-2	DI	120ac	--	I:014/04	HS	900	2A	Annunciator Remote Acknowledge and Silence	Ack Alarm	1
LCP-2	DI	120ac	--	I:014/05	HS	900	2B	Annunciator Remote Acknowledge and Silence	Test Alarm Lights	1
LCP-2	DI	120ac	--	I:014/06	ZSC	415		Filter Backwash Rate Control	Close	1
LCP-2	DI	120ac	--	I:014/07	ZSO	415		Filter Backwash Rate Control	Open	1
LCP-2	DI	120ac	--	I:014/10	CR	1		DC Power Supply 1 (Not) Failure	Alarm	1
LCP-2	DI	120ac	--	I:014/11	CR	2		DC Power Supply 2 (Not) Failure	Alarm	1
LCP-2	DI	120ac	--	I:014/12				Control Power On	Status	1
LCP-2	DI	120ac	--	I:014/13	**YS**	**511**	**3**	**Finished Water Pump No. 3 Valve Hydraulic System**	**Running**	**3**
LCP-2	DI	120ac	--	I:014/14	**PN**	**511**	**3**	**Finished Water Pump No. 3 Valve Hydraulic System**	**At Pressure**	**3**
LCP-2	DI	120ac	--	I:014/15	**YS**	**511**	**4**	**Finished Water Pump No. 4 Valve Hydraulic System**	**Running**	**3**
LCP-2	DI	120ac	--	I:014/16	**PN**	**511**	**4**	**Finished Water Pump No. 4 Valve Hydraulic System**	**At Pressure**	**3**
LCP-2	DI	120ac	--	I:014/17	**PN**	**513**		**Hydraulic System**	**At Pressure**	**3**
LCP-2	DI	120ac	--	**I:016/00**	**YS**	**530**		**Plant Effluent Valve Hydraulic System**	**Running**	**2 (SLOT 4)**
LCP-2	DI	120ac	--	**I:016/01**	**XA**	**530**		**Plant Effluent Valve Hydraulic System**	**Common Fault**	**2 (SLOT 4)**
LCP-2	DI	120ac	--	**I:016/02**	**HS**	**530**		**Plant Effluent Valve Hydraulic System**	**Remote**	**2 (SLOT 4)**
LCP-2	DI	120ac	--	**I:016/03**	**ZSC**	**530**		**Plant Effluent Valve**	**Open**	**2 (SLOT 4)**
LCP-2	DI	120ac	--	**I:016/04**	**ZSO**	**530**		**Plant Effluent Valve**	**Closed**	**2 (SLOT 4)**
LCP-2	DI	120ac	--	**I:016/05**				**Spare**		**2 (SLOT 4)**
LCP-2	DI	120ac	--	**I:016/06**				**Spare**		**2 (SLOT 4)**
LCP-2	DI	120ac	--	**I:016/07**				**Spare**		**2 (SLOT 4)**
LCP-2	DI	120ac	--	**I:016/10**				**Spare**		**2 (SLOT 4)**
LCP-2	DI	120ac	--	**I:016/11**				**Spare**		**2 (SLOT 4)**
LCP-2	DI	120ac	--	**I:016/12**				**Spare**		**2 (SLOT 4)**
LCP-2	DI	120ac	--	**I:016/13**				**Spare**		**2 (SLOT 4)**
LCP-2	DI	120ac	--	**I:016/14**				**Spare**		**2 (SLOT 4)**
LCP-2	DI	120ac	--	**I:016/15**				**Spare**		**2 (SLOT 4)**
LCP-2	DI	120ac	--	**I:016/16**				**Spare**		**2 (SLOT 4)**
LCP-2	DI	120ac	--	**I:016/17**				**Spare**		**2 (SLOT 4)**
LCP-2	DO	120ac	Y	O:022/00	SC	511	1	Finished Water Pump No. 1	Run	1
LCP-2	DO	120ac	Y	O:022/01	SC	511	2	Finished Water Pump No. 2	Run	1
LCP-2	DO	120ac	Y	O:022/02	SC	511	3	Finished Water Pump No. 3	Run	1
LCP-2	DO	120ac	Y	O:022/03	SC	511	4	Finished Water Pump No. 4	Run	1
LCP-2	DO	120ac	Y	O:022/04	**ZSC**	**511**	**1**	**Finished Water Pump No. 1 Discharge Valve**	**Open**	**3**
LCP-2	DO	120ac	Y	O:022/05	**ZSO**	**511**	**1**	**Finished Water Pump No. 1 Discharge Valve**	**Closed**	**3**
LCP-2	DO	120ac	Y	O:022/06	**ZSC**	**511**	**2**	**Finished Water Pump No. 2 Discharge Valve**	**Open**	**3**
LCP-2	DO	120ac	Y	O:022/07	**ZSO**	**511**	**2**	**Finished Water Pump No. 2 Discharge Valve**	**Closed**	**3**

Panel	Type	Elec	Relay	PLC Addr.	Prefix	Tag#	Suffix	Description	Range Function	Status: 1:Existing I/O 2:New Module & I/O 3:Redefined Existing I/O
LCP-2	DO	120ac	Y	O:022/10	**ZSC**	**511**	**1**	**Finished Water Pump No. 3 Discharge Valve**	**Open**	**3**
LCP-2	DO	120ac	Y	O:022/11	**ZSO**	**511**	**1**	**Finished Water Pump No. 3 Discharge Valve**	**Closed**	**3**
LCP-2	DO	120ac	Y	O:022/12	**ZSC**	**511**	**1**	**Finished Water Pump No. 4 Discharge Valve**	**Open**	**3**
LCP-2	DO	120ac	Y	O:022/13	**ZSO**	**511**	**1**	**Finished Water Pump No. 4 Discharge Valve**	**Closed**	**3**
LCP-2	DO	120ac	Y	O:022/14				Spare		1
LCP-2	DO	120ac	Y	O:022/15				Spare		1
LCP-2	DO	120ac	Y	O:022/16				Spare		1
LCP-2	DO	120ac	Y	O:022/17				Spare		1
LCP-2	DO	24ac	N	O:026/00	AAH	500	A	Filtered Water Turbidity High Alarm	Set at 0.1 NTU	1
LCP-2	DO	24ac	N	O:026/01	AAH	501	A	Filtered Water pH High Alarm	Set at 9.0 pH	1
LCP-2	DO	24ac	N	O:026/02	AAL	501	A	Filtered Water pH Low Alarm	Set at 6.0 pH	1
LCP-2	DO	24ac	N	O:026/03	AAH	505	A	Treated Water Total Chlorine High Alarm	Field Set	1
LCP-2	DO	24ac	N	O:026/04	AAL	505	A	Treated Water Total Chlorine Low Alarm	Field Set	1
LCP-2	DO	24ac	N	O:026/05	AAH	506	A	Treated Water Free Chlorine High Alarm	Field Set	1
LCP-2	DO	24ac	N	O:026/06	AAL	506	A	Treated Water Free Chlorine Low Alarm	Field Set	1
LCP-2	DO	24ac	N	O:026/07	LAL	510	A	Clearwell Level Low Alarm	Set at 15.0 Ft.	1
LCP-2	DO	24ac	N	O:026/10	LAH	510	A	Clearwell Level High Alarm	Set at 18.0 Ft.	1
LCP-2	DO	24ac	N	O:026/11	LAHH	510	A	Clearwell Level High/High Alarm	Set at 18.5 Ft.	1
LCP-2	DO	24ac	N	O:026/12	XA	511	1A	Finished Water Pump No. 1	Alarm	1
LCP-2	DO	24ac	N	O:026/13	XA	511	2A	Finished Water Pump No. 2	Alarm	1
LCP-2	DO	24ac	N	O:026/14	XA	511	3A	Finished Water Pump No. 3	Alarm	1
LCP-2	DO	24ac	N	O:026/15	XA	511	4A	Finished Water Pump No. 4	Alarm	1
LCP-2	DO	24ac	N	O:026/16	LAH	511	5A	Finished Water Suction Well Level High Alarm	Set at 17.5 Ft.	1
LCP-2	DO	24ac	N	O:026/17	LAL	511	5A	Finished Water Suction Well Level Low Alarm	Set at 12.5 Ft.	1
LCP-2	DO	24ac	N	O:030/00	LALL	511	5A	Finished Water Suction Well Level Low/Low Alarm	Set at 12.0 Ft.	1
LCP-2	DO	24ac	N	O:030/01	AAH	514	A	Finished Water Fluoride High Alarm	Set at 1.0 PPM	1
LCP-2	DO	24ac	N	O:030/02	AAL	514	A	Finished Water Fluoride Low Alarm	Set at 0.1 PPM	1
LCP-2	DO	24ac	N	O:030/03	AAH	515	A	Finished Water Turbidity High Alarm	Set at 0.1 NTU	1
LCP-2	DO	24ac	N	O:030/04	AAH	516	A	Finished Water pH High Alarm	Set at 9.0 pH	1
LCP-2	DO	24ac	N	O:030/05	AAL	516	A	Finished Water pH Low Alarm	Set at 7.0 pH	1
LCP-2	DO	24ac	N	O:030/06	AAH	517	A	Finished Water Total Chlorine High Alarm	Field Set	1
LCP-2	DO	24ac	N	O:030/07	AAL	517	A	Finished Water Total Chlorine Low Alarm	Field Set	1
LCP-2	DO	24ac	N	O:030/10	AAH	518	A	Finished Water Free Chlorine High Alarm	Field Set	1
LCP-2	DO	24ac	N	O:030/11	AAL	518	A	Finished Water Free Chlorine Low Alarm	Field Set	1
LCP-2	DO	24ac	N	O:030/12	AAH	519	A	Finished Water Manganese High Alarm	Set at 0.05 PPM	1
LCP-2	DO	24ac	N	O:030/13	AAH	520	A	Finished Water Payson Park Res Inlet Total Cl High Alarm	Field Set	1
LCP-2	DO	24ac	N	O:030/14	AAL	520	A	Finished Water Payson Park Res Inlet Total Cl Low Alarm	Field Set	1
LCP-2	DO	24ac	N	O:030/15	AAH	521	A	Finished Water Payson Park Res Inlet Free Cl High Alarm	Field Set	1
LCP-2	DO	24ac	N	O:030/16	AAL	521	A	Finished Water Payson Park Res Inlet Free Cl Low Alarm	Field Set	1
LCP-2	DO	24ac	N	O:030/17	LAH	522	1A	Payson Park Reservoir No. 1 Level High Alarm	Field Set	1

Panel	Type	Elec	Relay	PLC Addr.	Prefix	Tag#	Suffix	Description	Range Function	Status: 1:Existing I/O 2:New Module & I/O 3:Redefined Existing I/O
LCP-2	DO	24ac	N	O:032/00	LAH	522	2A	Payson Park Reservoir No. 2 Level High Alarm	Field Set	1
LCP-2	DO	24ac	N	O:032/01	LAL	522	1A	Payson Park Reservoir No. 1 Level Low Alarm	Field Set	1
LCP-2	DO	24ac	N	O:032/02	LAL	522	2A	Payson Park Reservoir No. 2 Level Low Alarm	Field Set	1
LCP-2	DO	24ac	N	O:032/03	LAHH	522	1A	Payson Park Reservoir No. 1 Level High/High Alarm	Field Set	1
LCP-2	DO	24ac	N	O:032/04	LAHH	522	2A	Payson Park Reservoir No. 2 Level High/High Alarm	Field Set	1
LCP-2	DO	24ac	N	O:032/05	AAH	525	A	Finished Water-Payson Park Reservoir Inlet pH High Alarm	Set at 9.0 pH	1
LCP-2	DO	24ac	N	O:032/06	AAL	525	A	Finished Water-Payson Park Reservoir Inlet pH Low Alarm	Set at 7.0 pH	1
LCP-2	DO	24ac	N	O:032/07	AAH	526	A	Finished Water-Payson Park Res Outlet Total Cl High Alarm	Field Set	1
LCP-2	DO	24ac	N	O:032/10	AAL	526	A	Finished Water-Payson Park Res Outlet Total Cl Low Alarm	Field Set	1
LCP-2	DO	24ac	N	O:032/11	AAH	527	A	Finished Water-Payson Park Res Outlet Free Cl High Alarm	Field Set	1
LCP-2	DO	24ac	N	O:032/12	AAL	527	A	Finished Water-Payson Park Res Outlet Free Cl Low Alarm	Field Set	1
LCP-2	DO	24ac	N	O:032/13	LAL	414	3A	Filter Backwash Suction Well Level Low Alarm	Set at 12.5 Ft.	1
LCP-2	DO	24ac	N	O:032/14	LAH	414	3A	Filter Backwash Suction Well Level High Alarm	Set at 17.5 Ft.	1
LCP-2	DO	24ac	N	O:032/15	LALL	414	3A	Filter Backwash Suction Well Level Low/Low Alarm	Set at 12.0 Ft.	1
LCP-2	DO	24ac	N	O:032/16	XA	1		DC Power Supply 1 Failure	Alarm	1
LCP-2	DO	24ac	N	O:032/17	XA	2		DC Power Supply 2 Failure	Alarm	1
LCP-2	DO	24ac	N	O:034/00	XA			PLC Trouble	Alarm	1
LCP-2	DO	24ac	N	O:034/01				Spare		1
LCP-2	DO	24ac	N	O:034/02				Spare		1
LCP-2	DO	24ac	N	O:034/03				Spare		1
LCP-2	DO	24ac	N	O:034/04				Spare		1
LCP-2	DO	24ac	N	O:034/05				Spare		1
LCP-2	DO	24ac	N	O:034/06				Spare		1
LCP-2	DO	24ac	N	O:034/07				Spare		1
LCP-2	DO	24ac	N	O:034/10				Spare		1
LCP-2	DO	24ac	N	O:034/11				Spare		1
LCP-2	DO	24ac	N	O:034/12				Spare		1
LCP-2	DO	24ac	N	O:034/13				Spare		1
LCP-2	DO	24ac	N	O:034/14				Spare		1
LCP-2	DO	24ac	N	O:034/15				Spare		1
LCP-2	DO	24ac	N	O:034/16				Spare		1
LCP-2	DO	24ac	N	O:034/17				Spare		1
LCP-2	AI	1-5vdc	--	R4/G0/CH1	AIT	500		Filtered Water Turbidity	0-100 NTU	1
LCP-2	AI	1-5vdc	--	R4/G0/CH2	AIT	501		Filtered Water pH	0-14 pH	1
LCP-2	AI	1-5vdc	--	R4/G0/CH3	TIT	502		Filtered Water Temperature	0-100 Degrees F	1
LCP-2	AI	1-5vdc	--	R4/G0/CH4	AIT	505		Treated Water Total Chlorine	0-20 PPM	1
LCP-2	AI	1-5vdc	--	R4/G0/CH5	**SC**	**511**	**1**	**Finished Water Pump No. 1 Speed**	**0-100%**	**3**
LCP-2	AI	1-5vdc	--	R4/G0/CH6	**SC**	**511**	**2**	**Finished Water Pump No. 2 Speed**	**0-100%**	**3**
LCP-2	AI	1-5vdc	--	R4/G0/CH7	**PIT**	**511**	**1**	**Finished Water Pump No. 1 Discharge Pressure**	**0-100 PSI**	**3**
LCP-2	AI	1-5vdc	--	R4/G0/CH8	**PIT**	**511**	**2**	**Finished Water Pump No. 2 Discharge Pressure**	**0-100 PSI**	**3**

Panel	Type	Elec	Relay	PLC Addr.	Prefix	Tag#	Suffix	Description	Range Function	Status: 1:Existing I/O 2:New Module & I/O 3:Redefined Existing I/O
LCP-2	AI	1-5vdc	--	R4/G2/CH1	AIT	506		Treated Water Free Chlorine	0-20 PPM	1
LCP-2	AI	1-5vdc	--	R4/G2/CH2	LIT	510		Clearwell Level	0-20 Ft.	1
LCP-2	AI	1-5vdc	--	R4/G2/CH3	SC	511	3	Finished Water Pump No. 3		1
LCP-2	AI	1-5vdc	--	R4/G2/CH4	SC	511	4	Finished Water Pump No. 4		1
LCP-2	AI	1-5vdc	--	R4/G2/CH5	LIT	511	5	Finished Water Suction Well Level	0-20 Ft.	1
LCP-2	AI	1-5vdc	--	R4/G2/CH6	FIT	512		Finished Water Flow	0-40 MGD	1
LCP-2	AI	1-5vdc	--	R4/G2/CH7	**PIT**	**511**	**3**	**Finished Water Pump No. 3 Discharge Pressure**	**0-100 PSI**	**3**
LCP-2	AI	1-5vdc	--	R4/G2/CH8	**PIT**	**511**	**4**	**Finished Water Pump No. 4 Discharge Pressure**	**0-100 PSI**	**3**
LCP-2	AI	1-5vdc	--	R4/G4/CH1	AIT	514		Finished Water Fluoride	0-5 PPM	1
LCP-2	AI	1-5vdc	--	R4/G4/CH2	AIT	515		Finished Water Turbidity	0-100 NTU	1
LCP-2	AI	1-5vdc	--	R4/G4/CH3	AIT	516		Finished Water pH	0-14 pH	1
LCP-2	AI	1-5vdc	--	R4/G4/CH4	AIT	517		Finished Water Total Chlorine	0-20 PPM	1
LCP-2	AI	1-5vdc	--	R4/G4/CH5	AIT	518		Finished Water Free Chlorine	0-20 PPM	1
LCP-2	AI	1-5vdc	--	R4/G4/CH6	**PIT**	**513**		**Finished Water Hydraulic System Pressure**	**0-5000 PSI**	**3**
LCP-2	AI	1-5vdc	--	R4/G4/CH7	**PIT**	**515**		**Plant Finished Water Pressure**	**0-100 PSI**	**3**
LCP-2	AI	1-5vdc	--	R4/G4/CH8				Spare		1
LCP-2	AI	1-5vdc	--	R4/G6/CH1	AIT	519		Finished Water Manganese	0-1 PPM	1
LCP-2	AI	1-5vdc	--	R4/G6/CH2	FIT	550		Plant Water Flow	0-1200 GPM	1
LCP-2	AI	1-5vdc	--	R4/G6/CH3	LIT	414	3	Filter Backwash Suction Well Level	0-20 Ft.	1
LCP-2	AI	1-5vdc	--	R4/G6/CH4	FIT	415		Filter Backwash Rate Control	0-20 MGD	1
LCP-2	AI	1-5vdc	--	R4/G6/CH5				Spare		1
LCP-2	AI	1-5vdc	--	R4/G6/CH6				Spare		1
LCP-2	AI	1-5vdc	--	R4/G6/CH7				Spare		1
LCP-2	AI	1-5vdc	--	R4/G6/CH8				Spare		1
LCP-2	AO	4-20ma	--	R5/G4/CH1	SIK	511	1	Finished Water Pump No. 1	0-100 %	1
LCP-2	AO	4-20ma	--	R5/G4/CH2	SIK	511	2	Finished Water Pump No. 2	0-100 %	1
LCP-2	AO	4-20ma	--	R5/G4/CH3	AI	520		Finished Water Payson Park Reservoir Inlet Total Cl	0-5 PPM	1
LCP-2	AO	4-20ma	--	R5/G4/CH4	AI	521		Finished Water Payson Park Reservoir Inlet Free Cl	0-5 PPM	1
LCP-2	AO	4-20ma	--	R5/G6/CH1	SIK	511	3	Finished Water Pump No. 3	0-100 %	1
LCP-2	AO	4-20ma	--	R5/G6/CH2	SIK	511	4	Finished Water Pump No. 4	0-100 %	1
LCP-2	AO	4-20ma	--	R5/G6/CH3	FI	523		Finished Water-Payson Park Reservoir Outlet Flow	0-40 MGD	1
LCP-2	AO	4-20ma	--	R5/G6/CH4	LI	522	1	Payson Park Reservoir No. 1 Level	0-25 Ft.	1
LCP-2	AO	4-20ma	--	R6/G0/CH1	LI	522	2	Payson Park Reservoir No. 2 Level	0-25 Ft.	1
LCP-2	AO	4-20ma	--	R6/G0/CH2	TI	524		Finished Water-Payson Park Reservoir Outlet Temp	30-80 Degrees F	1
LCP-2	AO	4-20ma	--	R6/G0/CH3				Spare		1
LCP-2	AO	4-20ma	--	R6/G0/CH4				Spare		1
LCP-2	AO	4-20ma	--	R6/G2/CH1	AI	525		Finished Water-Payson Park Reservoir Inlet pH	0-14 pH	1
LCP-2	AO	4-20ma	--	R6/G2/CH2	AI	526		Finished Water-Payson Park Reservoir Outlet Total Cl	0-5 PPM	1
LCP-2	AO	4-20ma	--	R6/G2/CH3				Spare		1
LCP-2	AO	4-20ma	--	R6/G2/CH4				Spare		1

Panel	Type	Elec	Relay	PLC Addr.	Prefix	Tag#	Suffix	Description	Range Function	Status: 1:Existing I/O 2:New Module & I/O 3:Redefined Existing I/O
LCP-2	AO	4-20ma	--	R6/G4/CH1	AI	527		Finished Water-Payson Park Reservoir Outlet Free Cl	0-5 PPM	1
LCP-2	AO	4-20ma	--	R6/G4/CH2	ZC	415		Filter Backwash Rate Control	0-100 %	1
LCP-2	AO	4-20ma	--	R6/G4/CH3				Spare		1
LCP-2	AO	4-20ma	--	R6/G4/CH4				Spare		1

8. In Section 41 24 26—Hydraulic Power Unit, **REPLACE** paragraph 2.06.D and its subparagraphs with the following paragraph:

   "D. The control panel specified herein shall have an enclosure rating of NEMA 12, be constructed of painted carbon steel with a gasket, and have the dimensions as shown on the Drawings."

DESIGN PLAN REVISIONS

1. On Drawing MP-505, **REPLACE** Detail D with the attached SK #1.
2. On Drawing MP-505, **REPLACE** Detail E with the attached SK #2.
3. On Drawing MP-505, **REPLACE** Detail F with the attached SK #3.
4. **ADD** additional valves listed in SK #4 to the Valve Schedule on Drawing MP-601.
5. **REVISE** Drawing I-3 as indicated in attached SK#5.
6. **REVISE** Drawing I-3 as indicated in attached SK#6.
7. **REVISE** Drawing I-3 as indicated in attached SK#7.
8. **REVISE** Drawing I-4 as indicated in attached SK#8.
9. **REVISE** Drawing I-4 as indicated in attached SK#9.

© 2016 CDM Smith
All Rights Reserved

SECTION 23 07 00
THERMAL INSULATION

PART 1 GENERAL

1.01 SCOPE OF WORK

A. This Section specifies the basic materials and methods of installation for insulation for piping systems.

1.02 SUBMITTALS

A. Submit, in accordance with Section 01 30 00, the following for each insulation by System: manufacturer's product data showing conformance with this Section for all required insulations, jackets, covers, coatings, adhesives, fasteners, supports and appurtenances; and complete manufacturer's instructions for installation of all required items.

B. All submittals shall contain a statement that Sections defining specific insulation types and thickness and all other referenced Sections have been read and complied with. The certification statement shall specify the specific Sections and be made by all of the following that are applicable: the Contractor, subcontractor, and the vendor. The statement shall be an individual statement for each party involved, and shall be included with every submittal and resubmittal.

C. All material deliveries must have accompanying manufacturer's certifications attesting to satisfactory results of product testing showing conformance with this Section.

D. For units that will be shipped exposed, provide a description of the protective packaging that will be used during transit.

E. In general, corrections or comments or lack thereof made relative to submittals during review shall not relieve the contractor from compliance with the requirements of the Drawings and Specifications. Submittals are for review of general conformance with the design concepts of the project and general compliance with the Contract Documents. The contractor is responsible for the final design conforming and correlating all quantities and dimensions, selecting fabrication processes and techniques of construction, coordinating the work of all trades, and performing the work in a safe and satisfactory manner.

1.03 REFERENCE STANDARDS

A. National Fire Protection Association (NFPA).

B. Occupational Safety and Health Administration (OSHA).

C. Where reference is made to one of the above standards, the revision in effect at the time of bid opening shall apply.

1.04 QUALITY ASSURANCE

A. The insulation materials to be furnished under this Section shall be essentially the standard products of manufacturers regularly engaged in the manufacture of insulation systems.

B. Several manufacturers are indicated as acceptable for each type of insulation in these specifications. The insulation subcontractor shall be responsible for determining that all insulation supplied for the project is suitable for installation in the spaces indicated. The insulation subcontractor shall also ensure that all materials used are compatible and in compliance with applicable codes and standards.

C. The Owner and Engineer reserve the right to sample and test any materials after delivery and to reject all components represented by a sample that fails to comply with the specified requirements.

1.05 DELIVERY, STORAGE, AND HANDLING

A. All materials shall be inspected for size, quality, and quantity against approved shop drawings upon delivery.

B. Delivery schedule of all equipment shall be coordinated with the Contractor. Equipment ready for shipment prior to the agreed-on shipping date shall be stored without cost to the Owner by the manufacturer.

C. All equipment shipped that is exposed, such as on a flatbed truck, shall be protected during transit. The equipment shall be protected from moisture, road salt, dirt, and stones or other materials thrown up from other vehicles. Electrical components shall be protected as above, but with special attention to moisture. The method of shipment protection shall be defined in the submittals.

D. All materials shall be suitably packed for shipment and long-term storage. Each package shall be labeled to indicate the project and the contents of each package. Where applicable, equipment numbers shall be marked on the container.

E. All materials shall be stored in a covered dry location off of the ground. When required to protect the materials, they shall be stored in a temperature-controlled location.

1.06 DEFINITIONS

A. Particular terminology used under this Section is defined as follows:

1. Traffic Level and Personnel Level - Areas including process areas, equipment rooms, boiler rooms, and other areas where insulation may be damaged by normal activity and local personnel traffic. Area extends to 8 feet above floor, walkways, platforms and stairs; and horizontally 3 feet beyond the edge of walkways, platforms, and stairs.

2. Exposed Piping – Piping visible from the floor level; includes all piping in equipment rooms, boiler rooms, etc.

3. Concealed Piping – Piping not visible from the floor level; includes piping above hung ceilings and in shaftways.

4. Ventilated Spaces - Areas supplied with outdoor air on a continuous or intermittent basis. The outdoor air may be heated and/or cooled or untreated.

5. Heated Spaces - Areas where heat is supplied to maintain a minimum temperature during the heating season.

6. Unheated Spaces - Areas where heat is not applied and there is no minimum temperature during the heating season.

7. Conditioned Spaces - Areas that are provided with heating and mechanical cooling.

8. Non-Conditioned Spaces - Areas that are not provided with mechanical cooling.

9. Indoor Piping - Piping within a building that is not exposed to the weather.

10. Outdoor Piping - Piping that is not within a building and which is exposed to the weather.

PART 2 PRODUCTS

2.01 GENERAL

A. All materials and integrated insulation assemblies furnished shall have flame spread ratings of not over 25 and smoke developed rating of not over 50 as established by tests conducted in accordance with ASTM E84.

B. The toxicity of the solvents used shall not exceed a maximum allowable concentration of 200 ppm or the latest value published by the American Conference of Governmental Industrial Hygienists and OSHA.

2.02 INSULATION FOR COLD PIPING-CELLULAR GLASS TYPE (TYPE I-13)

A. Insulation Material - Cellular glass material. Comply with ASTM C552-07. Thermal conductivity k value shall not exceed 0.29 at 75 degrees mean temperature.

B. Jacket shall be field-applied 0.008-inch polypropylene/scrim/metalized polyester jacket with self-sealing lap. Jacket shall be Alpha Associates Style VR-R-HD.

C. Acceptable manufacturer shall be Pittsburgh Corning.

2.03 ACCESSORY MATERIALS

A. Adhesives, coatings, and vapor barrier materials shall be compatible with the insulation as recommended by the insulation manufacturer. Adhesives, sealants, mastics, and coatings shall be manufactured by Foster, H.B. Fuller Construction Products, Childers, or approved equal. Foster and Childers (CP) Numbers are listed below by adhesive/sealant/coating types.

1. Lagging adhesive/coating: 30-36, CP-50, AMV-1. (LEED IEQ 4.2 compliant as a coating.)

2. Vapor barrier coating: 30-35, CP-30. (To meet LEED IEQ Credit 4.2, select water based, Foster 30-80, Childers CP-38.)
   a. Permeance shall be 0.013 perms or less at 43 mils dry per ASTM E96, Procedure B.

3. Vapor seal lap adhesive: 85-20, CP-82. (To meet LEED IEQ Credit 4.1, select Foster 85-60.)

4. Duct insulation adhesive: 85-20, CP-82. (To meet LEED IEQ Credit 4.1, select Foster 85-60, Childers CP-127.)

5. Metal Jacketing/Flashing Sealant: 95-44, CP-76. (LEED IEQ 4.1 compliant.)

6. Weather Barrier mastic (light gray): 46-51, CP-10-1. (LEED IEQ 4.2 compliant as a coating.)

7. Cellular glass adhesive and joint sealant: Pittseal CW as recommended by the manufacturer.

2.04 FITTING COVERS

A. Fitting covers shall be premolded shapes with PVC jackets and fiberglass inserts to insulate elbow fittings. Insert shall have a maximum "K" value of 0.28 at 75 degrees F mean temperature. Basis-of-Design product is Zeston 2000 by Johns Manville, similar products by Proto Corp, or equal.

PART 3 EXECUTION

3.01 GENERAL

A. Do not apply insulation prior to testing and acceptance of piping. Insulation shall not be applied to damp or frosty surface. Clean dust, dirt, grease, and moisture from surfaces of pipe before applying insulation or insulation adhesives. Nameplates and equipment certification and data tags affixed to any piece of apparatus shall not be covered. Where two layers of insulation are used, stagger all joints both ways. Secure each layer independently. Continue insulation and jacketing through interior walls and partitions, except for ones that are sealed with a mechanical seal.

B. The Contractor shall not install any equipment or materials until the Owner and Engineer have approved all submittals. If any equipment or materials are installed prior to approval of the submittals, it shall be at the Contractor's risk.

C. Insulation, adhesives, coatings, and vapor barrier materials shall be applied in accordance with manufacturer's recommendations. Do not apply these materials when ambient temperature is above or below the maximum and minimum ambient temperature, respectively, specified as limits by the manufacturer.

D. All penetrations through a vapor barrier for hangers, instruments, etc., shall be sealed to provide a complete vapor barrier. The use of staples or other fasteners that penetrate the vapor barrier is not permitted.

E. Insulation systems that require a vapor barrier shall be installed with an intact vapor barrier that covers the entire pipe to be insulated. All edges of insulation that do not abut another piece of insulation shall have the vapor barrier extended and sealed to the item being insulated. All penetrations through the insulation such as for thermowells, test ports, dampers, nameplates, or other items shall have the vapor barrier extend over the edges of the insulation and sealed to the item being insulated.

F. For insulated items exceeding 100 square feet, or 20 feet in length, extend the vapor barrier to the item being insulated to reduce the area or length within a single enclosed area to the dimensions listed above.

3.02 INSTALLATION OF PIPING INSULATION

A. Preformed sectional insulation and jacketing shall be used where possible. The use of blanket insulation shall be limited to fittings that cannot be insulated with sectional insulation. All joints on preformed and fabricated insulation shall be accurately fitted to eliminate voids. Voids shall be eliminated by refitting or replacing the insulation. End joints shall be firmly butted to adjoining sections of insulation.

B. Outdoor piping insulation shall be installed so as to keep the insulation dry. Joints shall be located to prevent the entrance of water. Breaks in jacketing caused by vertical connections or instruments shall be protected by hoods or cones. Where there are breaks in the jacket, plastic moisture barriers shall be provided under the jacketing to protect the insulation. Insulation and jacketing of valves shall be waterproofed. Insulation and jacketing of the valve shall be removable to allow servicing of the valve.

C. Vapor seal adhesive shall be used to seal seams and to butt sections on all cold piping if self-sealing laps are not provided. The use of staples or any other fastening method that would penetrate the vapor barrier is not permitted on cold piping systems. Staples may be used on hot piping systems where there is no potential for condensation.

D. Metal or plastic jacketing shall have its joints staggered from those of the insulation. Joints between jacketing and insulation shall be staggered a minimum of 3 inches.

E. Metal or plastic jacketing shall have a minimum 3-inch overlap on longitudinal joints and end joints. Longitudinal joints in horizontal piping shall have the outer lap of the joint pointed down to shed water. The end of the outer lap shall be located at the five or seven o'clock positions.

F. Where piping is provided with electric or steam heat tracing the insulation shall not be installed until the heat tracing has been tested and accepted. Insulation shall be sized to allow for the heat tracing line without deforming the insulation.

G. Where supports, anchors, or guides are in direct contact with cold piping, insulate the item in contact a distance of four times the insulation thickness. Clamps and non-welded support devices shall be contained within the insulation. The space within insulating saddles at pipe hangers shall be filled with insulation.

H. On vertical risers exceeding 15-feet in height, provide intermediate support for the insulation. For carbon steel pipe, this support shall consist of angle clips or other suitable devices welded to the pipe at about 15-feet on centers and concealed by the pipe covering. On non-carbon steel piping, clamps, or other non-welded devices shall be used.

I. Unless otherwise specified, insulate all valves, control valves, fittings, pipe specialties, and all other components that could be construed as being part of the piping system. Insulate valve bonnets to a point just below the stuffing box.

J. Bridge flanges, unions, and pipeline strainers with block or sectional insulation wired in place. Wire shall be black steel, annealed. Stop the pipe insulation a sufficient distance to allow

removal of flange bolts without disturbing the pipe insulation and extend the block at least 2 inches over the adjacent pipe insulation. Flange covers shall be designed for removal without damaging the pipe insulation. Fill voids with blanket insulation.

3.03 INSULATION FOR CELLULAR GLASS PIPING (TYPE I-13)

A. Apply per manufacturer's installation instructions.

B. Insulation thickness shall be 1.5 inches, single layer for piping 14 inches in nominal diameter and smaller and 2.0 inches, single layer for piping 16 inches in nominal diameter and larger.

END OF SECTION

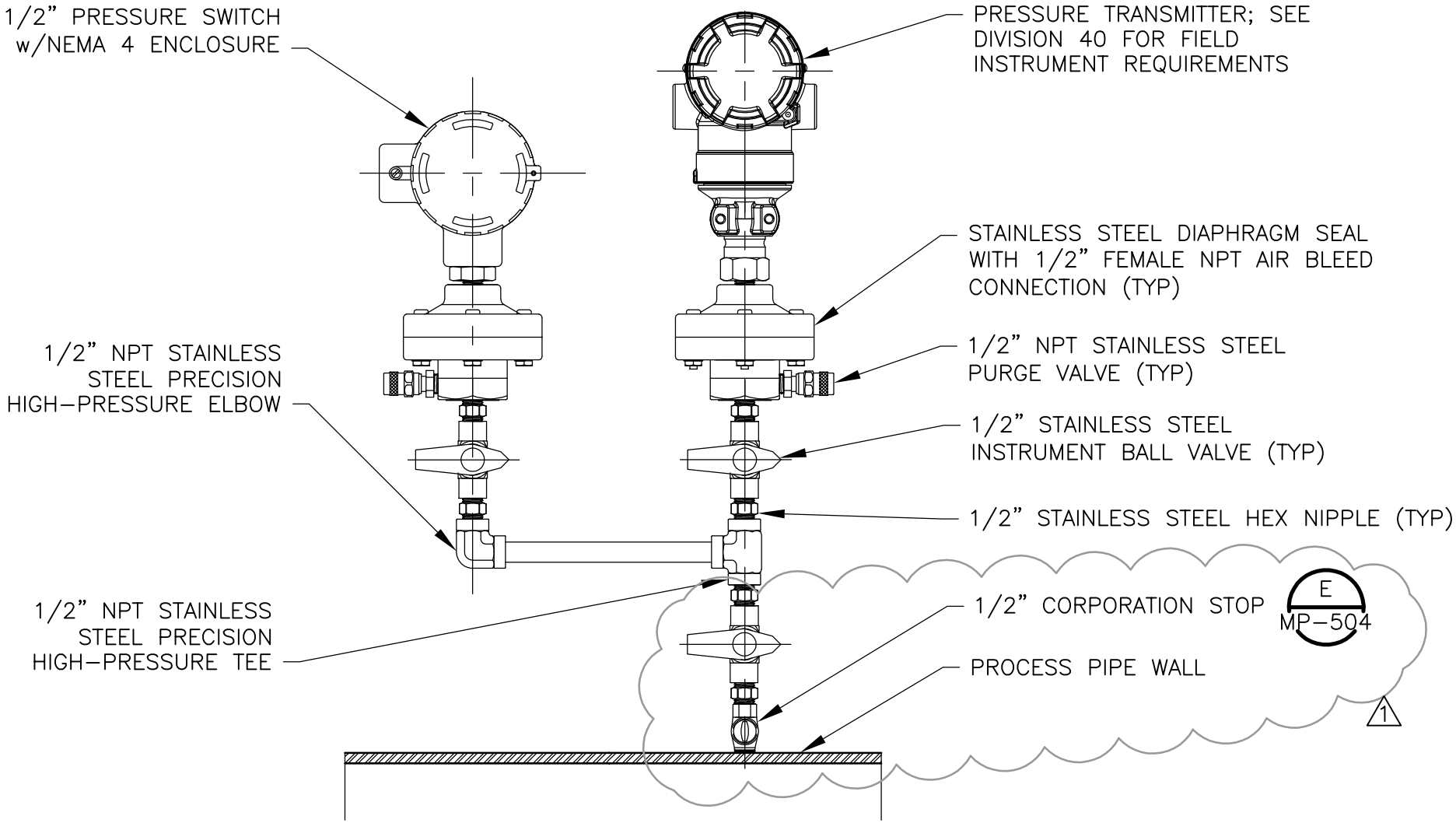

FINISHED WATER PUMP PRESSURE TRANSMITTER-SWITCH ASSEMBLY WITH DIAPHRAGM SEALS

DETAIL D

NTS

CDM Smith
75 State Street, Suite 701
Boston, MA 02109
Tel: (617) 452-6000

CITY OF CAMBRIDGE, MASSACHUSETTS
WALTER J. SULLIVAN
WATER PURIFICATION FACILITY
PUMPING SYSTEM IMPROVEMENTS

SK #1 - MODIFICATIONS TO DETAIL D ON SHEET MP-505

FEBRUARY 2016

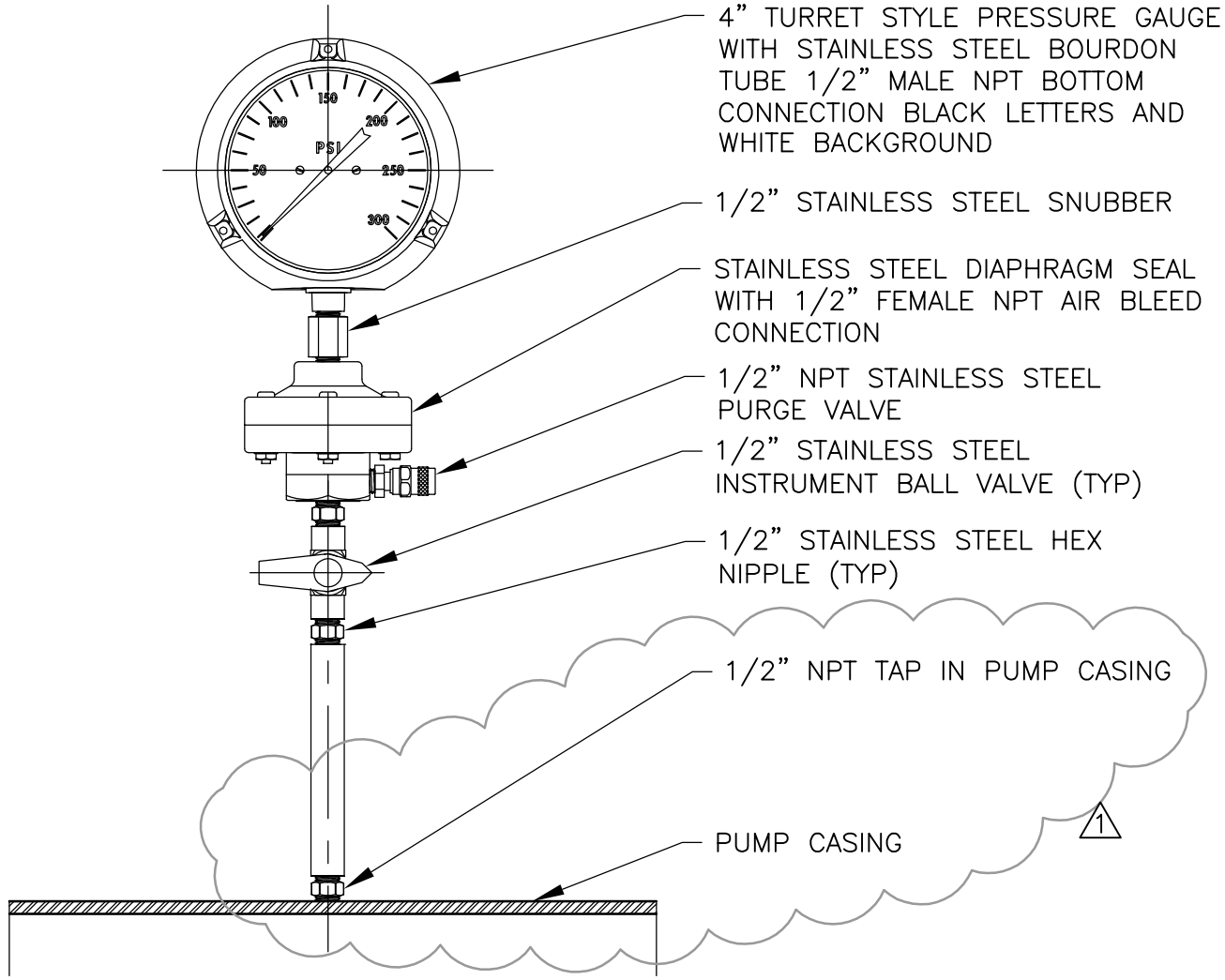

FINISHED WATER PRESSURE GAUGE ASSEMBLY WITH SNUBBER AND DIAPHRAGM SEALS

DETAIL E

NTS

CDM Smith
75 State Street, Suite 701
Boston, MA 02109
Tel: (617) 452-6000

CITY OF CAMBRIDGE, MASSACHUSETTS
WALTER J. SULLIVAN
WATER PURIFICATION FACILITY
PUMPING SYSTEM IMPROVEMENTS

SK #2 - MODIFICATIONS TO DETAIL E
ON SHEET MP-505

FEBRUARY 2016

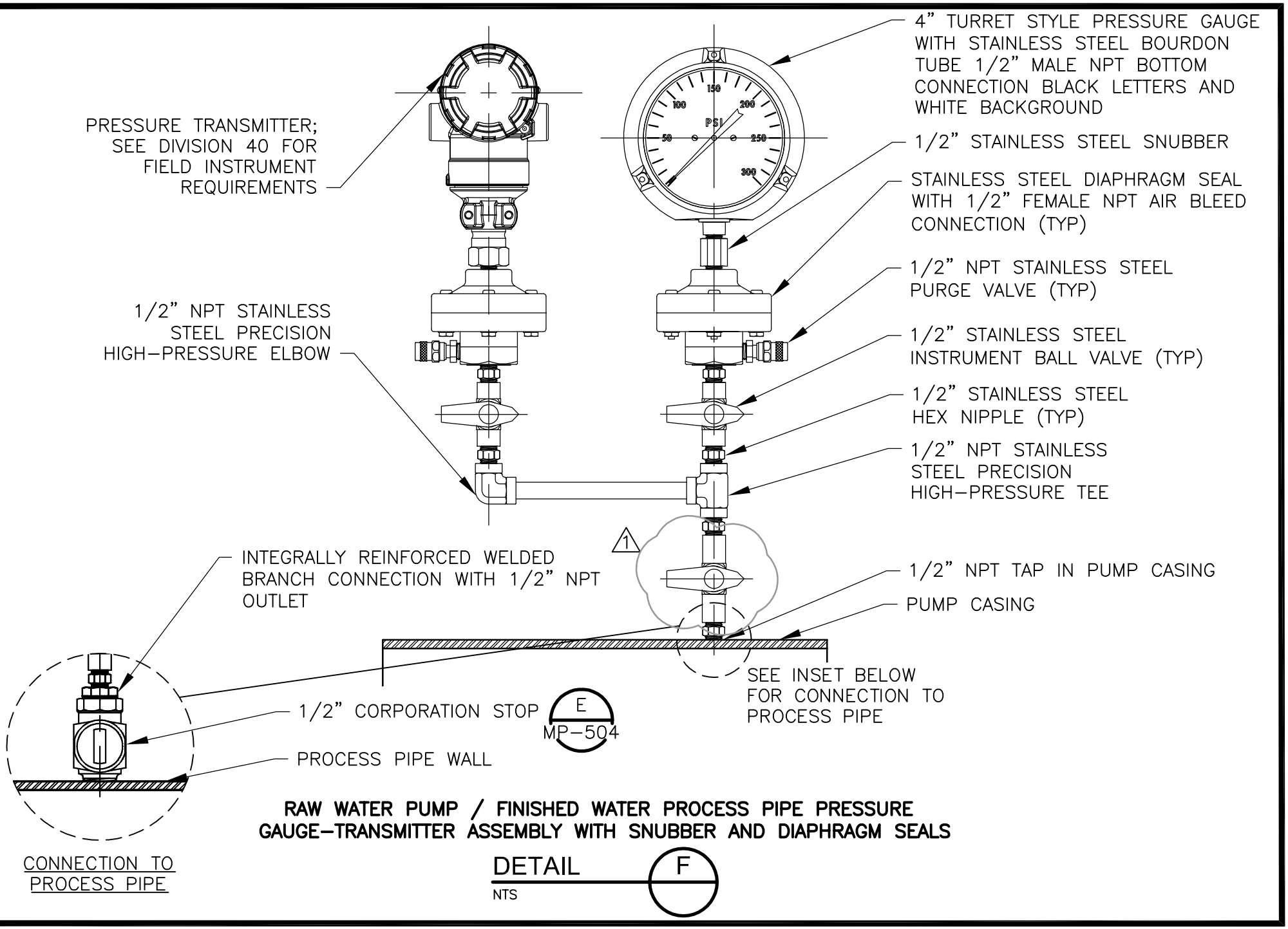

RAW WATER PUMP / FINISHED WATER PROCESS PIPE PRESSURE GAUGE-TRANSMITTER ASSEMBLY WITH SNUBBER AND DIAPHRAGM SEALS

DETAIL F

NTS

CDM Smith
75 State Street, Suite 701
Boston, MA 02109
Tel: (617) 452-6000

CITY OF CAMBRIDGE, MASSACHUSETTS
WALTER J. SULLIVAN
WATER PURIFICATION FACILITY
PUMPING SYSTEM IMPROVEMENTS

SK #3 - MODIFICATIONS TO DETAIL F ON SHEET MP-505

FEBRUARY 2016

VALVE SCHEDULE

VALVE TAG NUMBER	PIPING PROCESS	VALVE DESIGN TYPE	VALVE SPEC SECTION	BODY MATERIAL		TRIM MATERIAL		INLET SIZE	INLET CONN. TYPE	OUTLET SIZE	OUTLET CONN. TYPE	CONN. RATING CLASS	COATING	LINING	MAX SERVICE TEMP (°F)	MIN SERVICE TEMP (°F)	MAX OPER. PRESS (PSI)	VALVE DRIVE TYPE	AUTOMATIC CONTROL VALVES								VALVE ACTUATORS							STROKE TIME (SEC)		SERVICE TYPE		COMMENTS / NOTES
				ASTM	ALLOY GRADE TYPE	ASTM	ALLOY GRADE TYPE												CONTROL REGIME	Cv MAX (GPM^ PSI)	MAX CAVITATION	Cv MIN (GPM^ PSI)	MAX CAVITATION	VALVE TRIM CONFIG	CONTROL SETTING	SPEC SECTION	ACTUATOR TYPE	SPEC SECTION	NEMA RATING	PHASE	VOLTS	HP	HYD PRESS (PSI)	OPEN	CLOSE	O/C	MOD	
FW-015	FW	INSTRUMENT BALL	40 05 63.20	A276	S31600	–	PTFE	1/2	TH	1/2	TH	3000	–	–	82	35	155	–	–	–	–	–	–	–	–	–	–	–	–	–	–	–	–	–	–	X	–	
FW-016	FW	INSTRUMENT BALL	40 05 63.20	A276	S31600	–	PTFE	1/2	TH	1/2	TH	3000	–	–	82	35	155	–	–	–	–	–	–	–	–	–	–	–	–	–	–	–	–	–	–	X	–	
FW-017	FW	INSTRUMENT BALL	40 05 63.20	A276	S31600	–	PTFE	1/2	TH	1/2	TH	3000	–	–	82	35	155	–	–	–	–	–	–	–	–	–	–	–	–	–	–	–	–	–	–	X	–	
FW-018	FW	INSTRUMENT BALL	40 05 63.20	A276	S31600	–	PTFE	1/2	TH	1/2	TH	3000	–	–	82	35	155	–	–	–	–	–	–	–	–	–	–	–	–	–	–	–	–	–	–	X	–	
FW-019	FW	INSTRUMENT BALL	40 05 63.20	A276	S31600	–	PTFE	1/2	TH	1/2	TH	3000	–	–	82	35	155	–	–	–	–	–	–	–	–	–	–	–	–	–	–	–	–	–	–	X	–	
RW-009	RW	INSTRUMENT BALL	40 05 63.20	A276	S31600	–	PTFE	1/2	TH	1/2	TH	3000	–	–	82	35	45	–	–	–	–	–	–	–	–	–	–	–	–	–	–	–	–	–	–	X	–	
RW-010	RW	INSTRUMENT BALL	40 05 63.20	A276	S31600	–	PTFE	1/2	TH	1/2	TH	3000	–	–	82	35	45	–	–	–	–	–	–	–	–	–	–	–	–	–	–	–	–	–	–	X	–	
RW-011	RW	INSTRUMENT BALL	40 05 63.20	A276	S31600	–	PTFE	1/2	TH	1/2	TH	3000	–	–	82	35	45	–	–	–	–	–	–	–	–	–	–	–	–	–	–	–	–	–	–	X	–	
RW-012	RW	INSTRUMENT BALL	40 05 63.20	A276	S31600	–	PTFE	1/2	TH	1/2	TH	3000	–	–	82	35	45	–	–	–	–	–	–	–	–	–	–	–	–	–	–	–	–	–	–	X	–	
RW-301	RW	PLUNGER	40 05 73.23	A536	60-40-18	A276	316L	20	FLG	20	FLG	150	FBE	–	82	35	45	WORM	–	–	–	–	–	–	–	–	ELEC	40 05 57.23	–	3	480	<1	–	–	–	–	X	1
RW-302	RW	PLUNGER	40 05 73.23	A536	60-40-18	A276	316L	20	FLG	20	FLG	150	FBE	–	82	35	45	WORM	–	–	–	–	–	–	–	–	ELEC	40 05 57.23	–	3	480	<1	–	–	–	–	X	

CDM Smith
75 State Street, Suite 701
Boston, MA 02109
Tel: (617) 452-6000

CITY OF CAMBRIDGE, MASSACHUSETTS
WALTER J. SULLIVAN
WATER PURIFICATION FACILITY
PUMPING SYSTEM IMPROVEMENTS

SK #4 - MODIFICATIONS TO VALVE SCHEDULE ON SHEET MP-601

FEBRUARY 2016

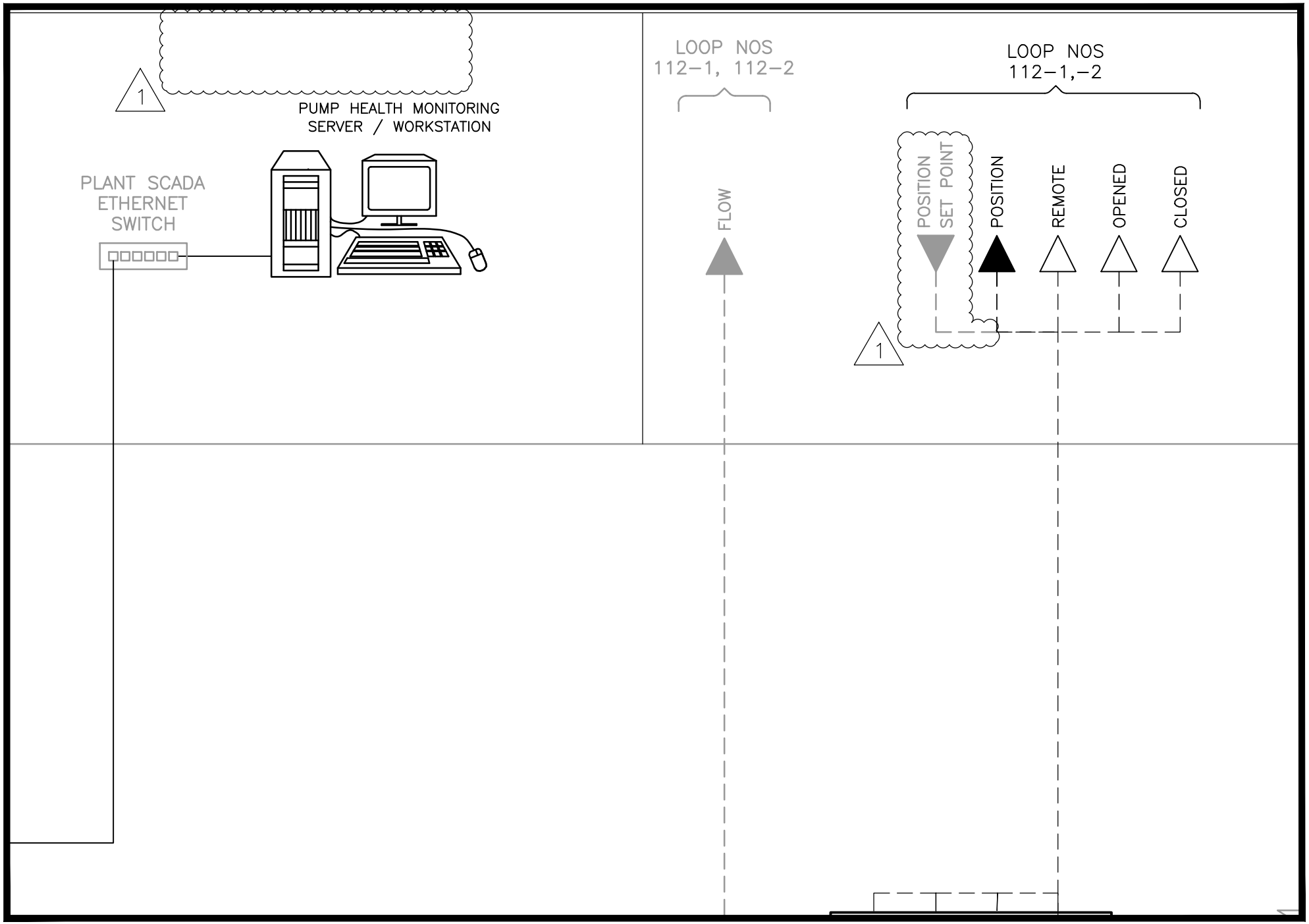

CDM Smith
75 State Street, Suite 701
Boston, MA 02109
Tel: (617) 452-6000

CITY OF CAMBRIDGE, MASSACHUSETTS
WALTER J. SULLIVAN
WATER PURIFICATION FACILITY
PUMPING SYSTEM IMPROVEMENTS

SK#5 - MODIFICATIONS TO I-3
FEBRUARY 2016

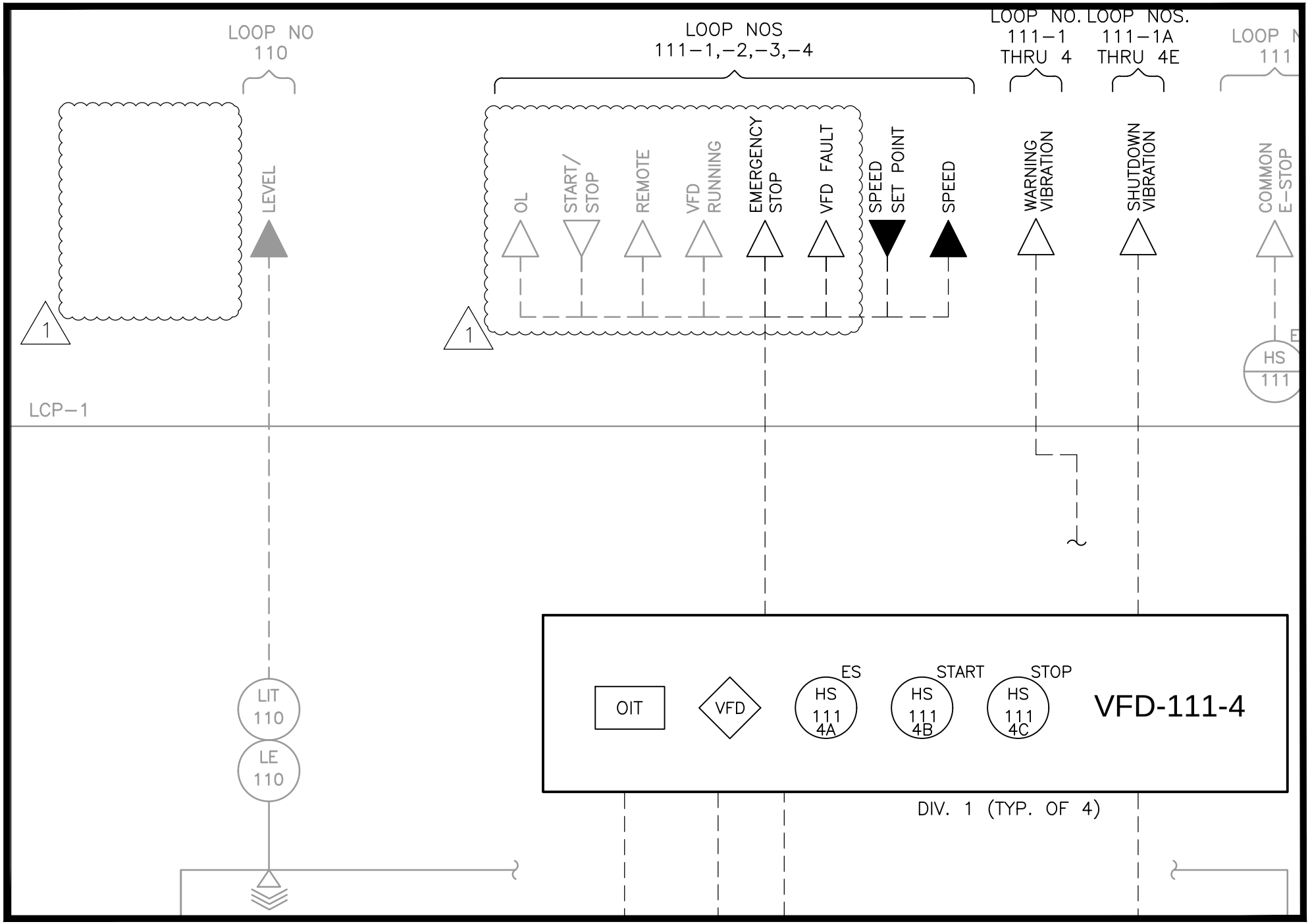

CDM Smith
75 State Street, Suite 701
Boston, MA 02109
Tel: (617) 452-6000

CITY OF CAMBRIDGE, MASSACHUSETTS
WALTER J. SULLIVAN
WATER PURIFICATION FACILITY
PUMPING SYSTEM IMPROVEMENTS

SK#6 - MODIFICATIONS TO I-3
FEBRUARY 2016

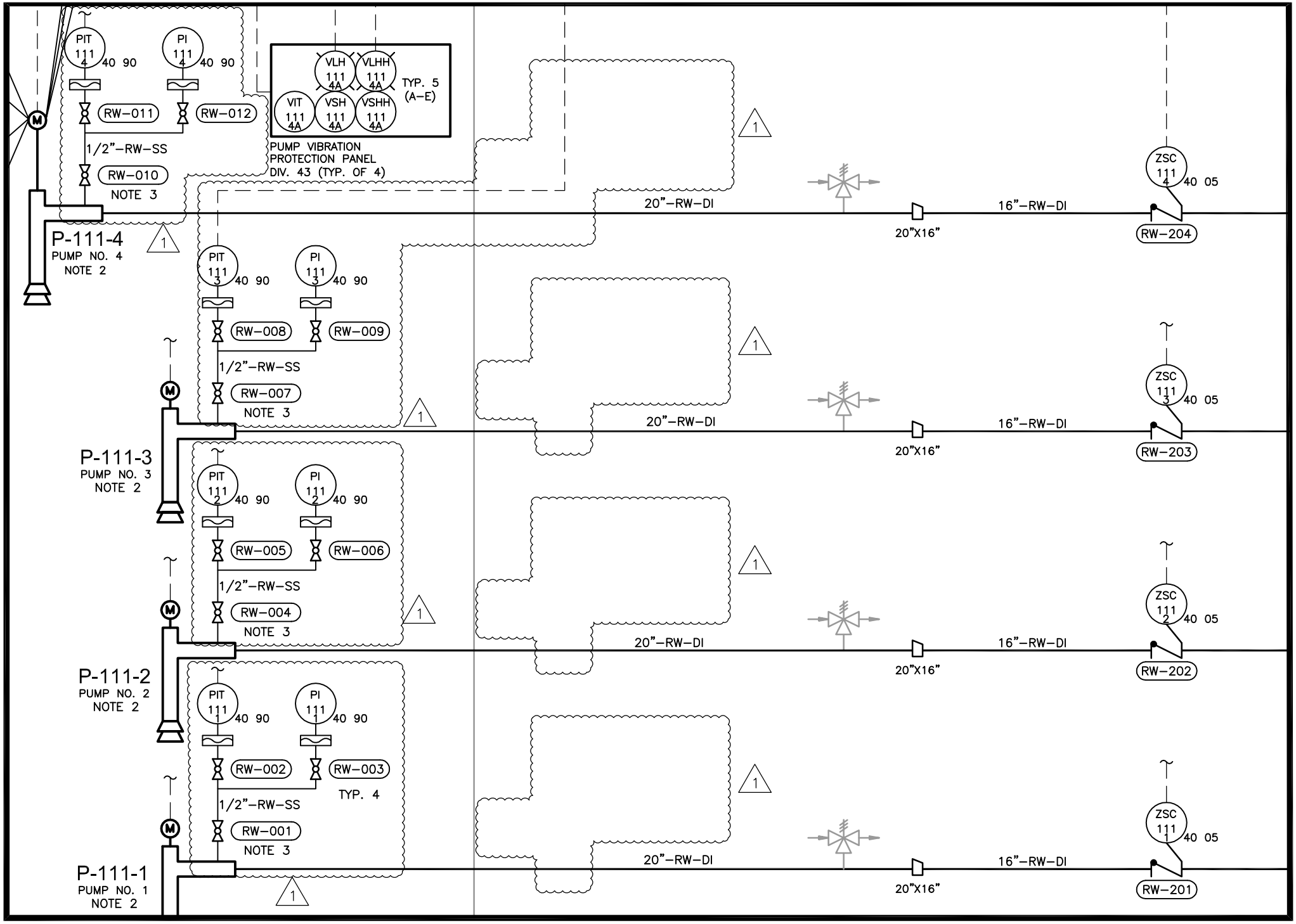

CDM Smith
75 State Street, Suite 701
Boston, MA 02109
Tel: (617) 452-6000

CITY OF CAMBRIDGE, MASSACHUSETTS
WALTER J. SULLIVAN
WATER PURIFICATION FACILITY
PUMPING SYSTEM IMPROVEMENTS

SK#7 - MODIFICATIONS TO I-3
FEBRUARY 2016

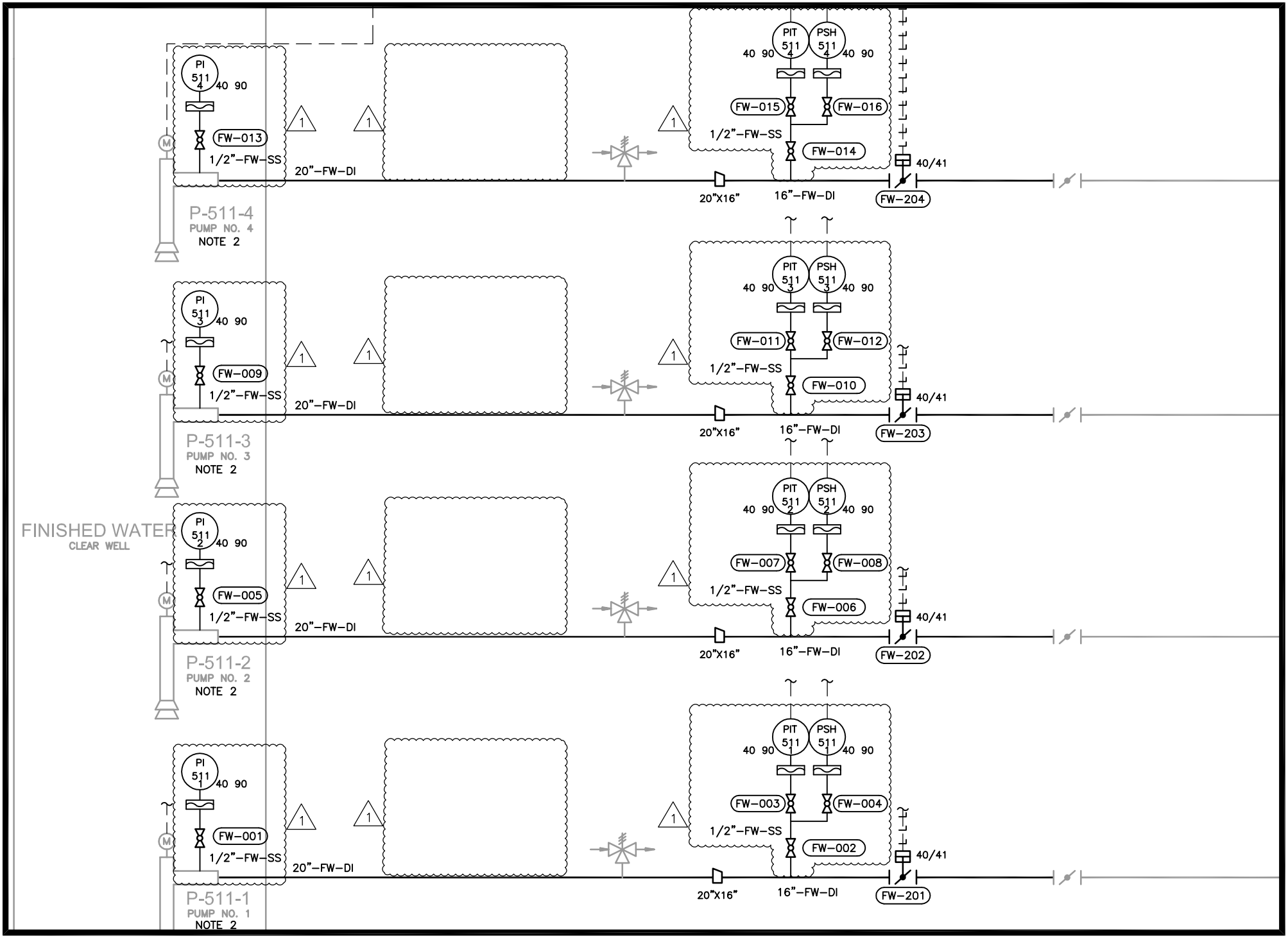

CDM Smith
75 State Street, Suite 701
Boston, MA 02109
Tel: (617) 452-6000

CITY OF CAMBRIDGE, MASSACHUSETTS
WALTER J. SULLIVAN
WATER PURIFICATION FACILITY
PUMPING SYSTEM IMPROVEMENTS

SK#8 - MODIFICATIONS TO I-4
FEBRUARY 2016

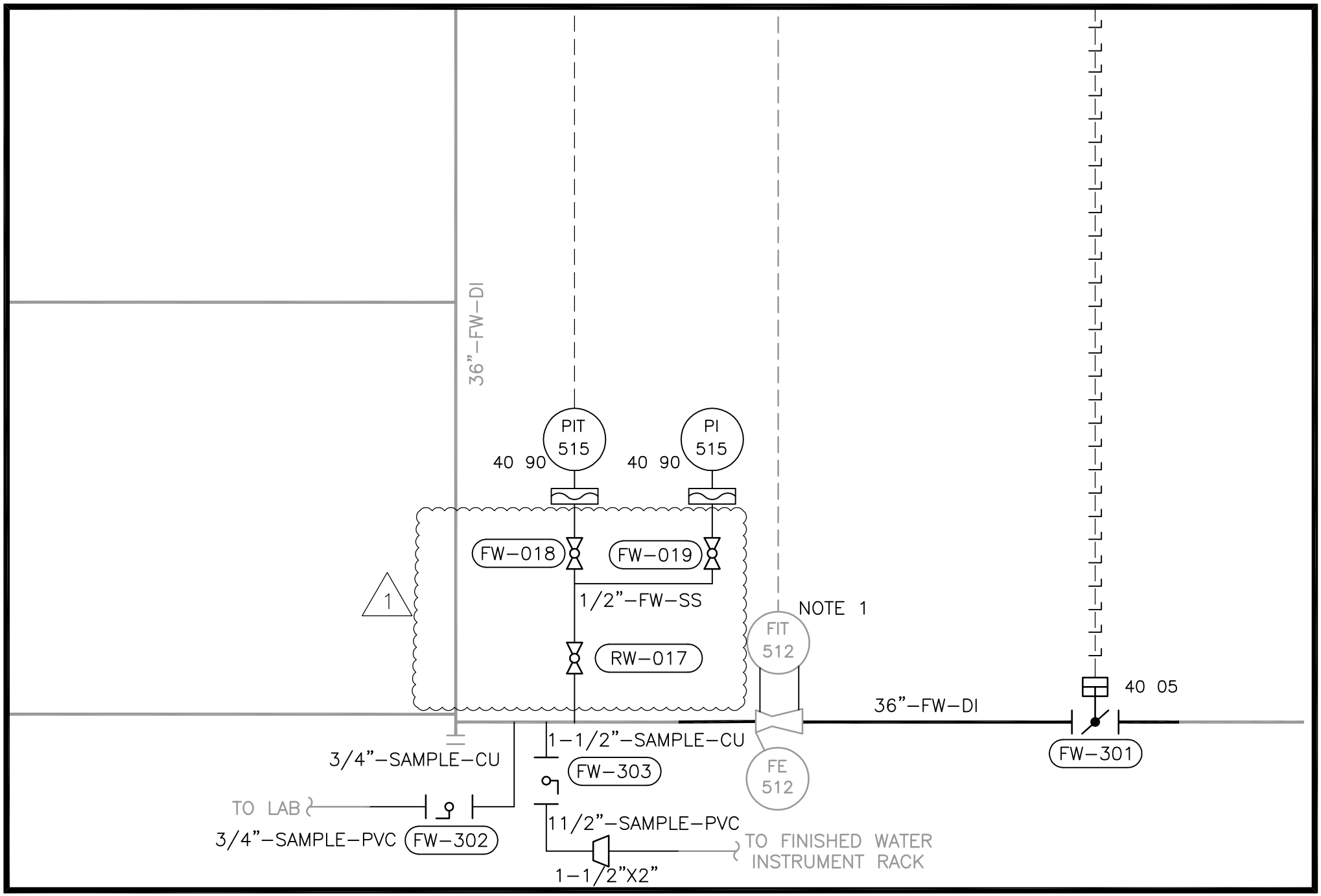

CDM Smith
75 State Street, Suite 701
Boston, MA 02109
Tel: (617) 452-6000

CITY OF CAMBRIDGE, MASSACHUSETTS
WALTER J. SULLIVAN
WATER PURIFICATION FACILITY
PUMPING SYSTEM IMPROVEMENTS

SK#9 - MODIFICATIONS TO I-4
FEBRUARY 2016